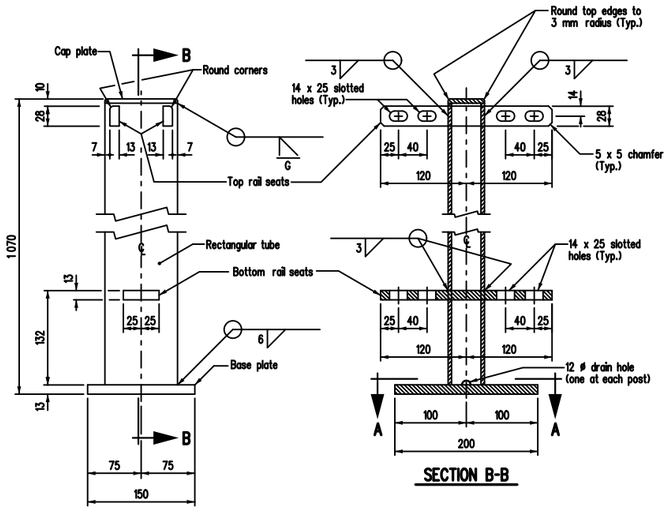

POST Mk. "PR1"

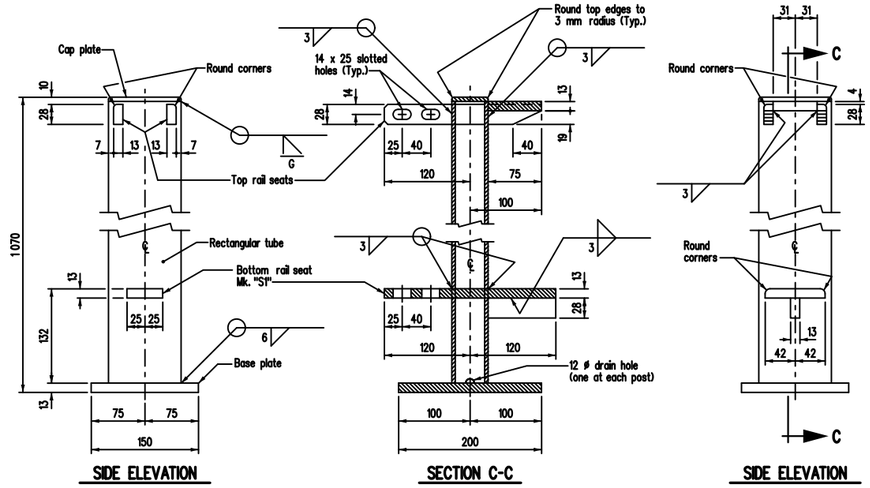

POST Mk. "PR2"

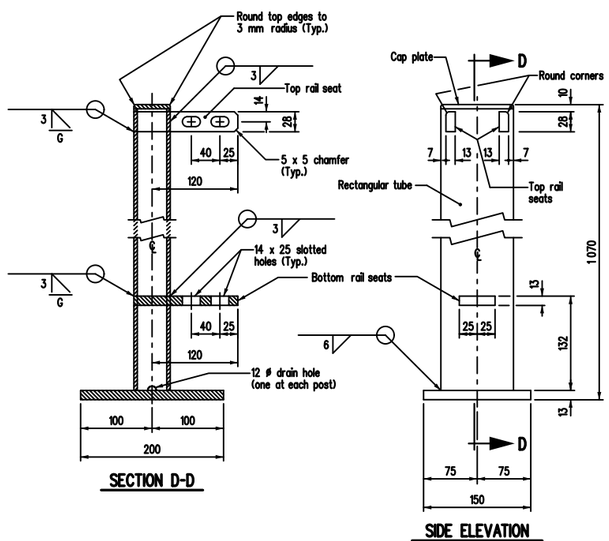

POST Mk. "PR3"

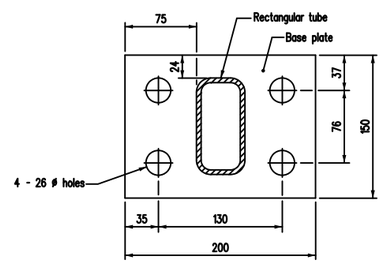

SECTION A-A

Typical for all pedestrian railposts.
Scale 1 : 3

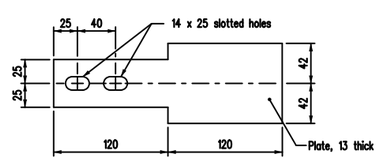

BOTTOM RAIL SEAT Mk. "S1"

For Posts Mk. "PR2".
Scale 1 : 3

BILL OF MISCELLANEOUS ALUMINUM
FOR PEDESTRIAN HANDRAIL RAILPOST

Site No. 2924-00

MARK	No.	DESCRIPTION			MASS PER UNIT	TOTAL MASS
PR1	73	Post - Each unit to be fabricated from (aluminum):				420.63
		1 rectangular tube	51 x 102 x 4.8 x 1051 long	Alcan Ext. No. 94152	3.873	
		2 top rail seats	13 x 28 x 240 long		0.394	
		1 bottom rail seat	13 x 50 x 240 long		0.392	
		1 base plate	13 x 150 x 200 long		1.016	
		1 cap plate	6 x 51 x 102 long		0.087	
					5.762	
PR2	6	Post - Each unit to be fabricated from (aluminum):				36.92
		1 rectangular tube	51 x 102 x 4.8 x 1051 long	Alcan Ext. No. 94152	3.873	
		2 top rail seats	13 x 28 x 220 long		0.348	
		1 top rail seat plate	13 x 62 x 75 long		0.169	
		1 bottom rail seat Mk. "S1"	As Detailed		0.564	
		1 bottom rail seat plate	13 x 28 x 95 long		0.097	
		1 base plate	13 x 150 x 200 long		1.016	
		1 cap plate	6 x 51 x 102 long		0.087	
					6.154	
PR3	2	Post - Each unit to be fabricated from (aluminum):				9.83
		1 rectangular tube	51 x 102 x 4.8 x 901 long	Alcan Ext. No. 94152	3.320	
		2 top rail seats	13 x 28 x 146 long		0.250	
		1 bottom rail seat	13 x 50 x 146 long		0.244	
		1 base plate	13 x 150 x 200 long		1.016	
		1 cap plate	6 x 51 x 102 long		0.087	
					4.917	
				Total mass of aluminum	=	467.38 kg

BILL OF MISCELLANEOUS METAL
FOR PEDESTRIAN HANDRAIL PANELS

Site No. 2924-00

MARK	No.	DESCRIPTION	MASS PER UNIT	TOTAL MASS
	924	S/S flat head socket cap screw, 13 ø x 38 long c/w S/S nut, plate & lock washer	0.080	73.92
	24	S/S flat head socket cap screw, 10 ø x 30 long	0.020	0.48
	24	S/S lock washer for 10ø cap screws	0.003	0.07
		Total mass	=	74.47 kg

NOTES:

1. This drawing to be read in conjunction with Sheets No.113, 114 and the specifications.
2. Aluminum extrusions shall conform to ASTM B221, Alloy 6351-T6. Aluminum plates shall conform to ASTM B221, Alloy 5083.
3. Stainless steel, countersunk head, socket cap screws shall meet the ASTM A276, Type 430 requirements.
4. M.I.G. welding process shall be used.
5. Railposts shall be set vertical.
6. Anti-seize coating to be supplied by the General Contractor and applied to all threaded components when being assembled, ie. LPS-3 manufactured by Holt-Lloyd (Canada) Ltd. Markham Ontario.
7. The Miscellaneous Aluminum Contractor shall paint the bottom surface of shims (the surface in contact with concrete) with two coats of alkali resistant bituminous paint, each coat being 1 mm in thickness.
8. S/S denotes stainless steel.
9. All slotted holes must be finished smooth and true.
10. Contractor to supply sample panel and receive approval of the Engineer prior to fabrication of the remainder. The approved panel shall become the standar of asseptance of all panels.

REVISIONS		
DATE	BY	DESCRIPTION

ALUMINUM PEDESTRIAN HANDRAIL DETAILS

RECONSTRUCTION AND STRENGTHENING OF EXISTING BRIDGE
OVER ASSINIBOINE RIVER - CONTRACT THREE
ON P.T.H. No. 100 IN R.L.'S 72, 73 & 94
PARISH OF ST. CHARLES

CITY OF WINNIPEG

Manitoba
Infrastructure and Transportation
Water Control and Structures

DESIGN	BY: M.B.C.	
	CHECKED: S.S.R.	
DETAILS	BY: D.P.W.	
	CHECKED: S.S.R./J.J.	

RELEASED FOR CONSTRUCTION
BY:

DIRECTOR — DATE
STRUCTURES, DESIGN AND CONSTRUCTION BRANCH

SCALE: 1 : 4 or As Shown
SHEET No. 115
SITE No. 2924-00