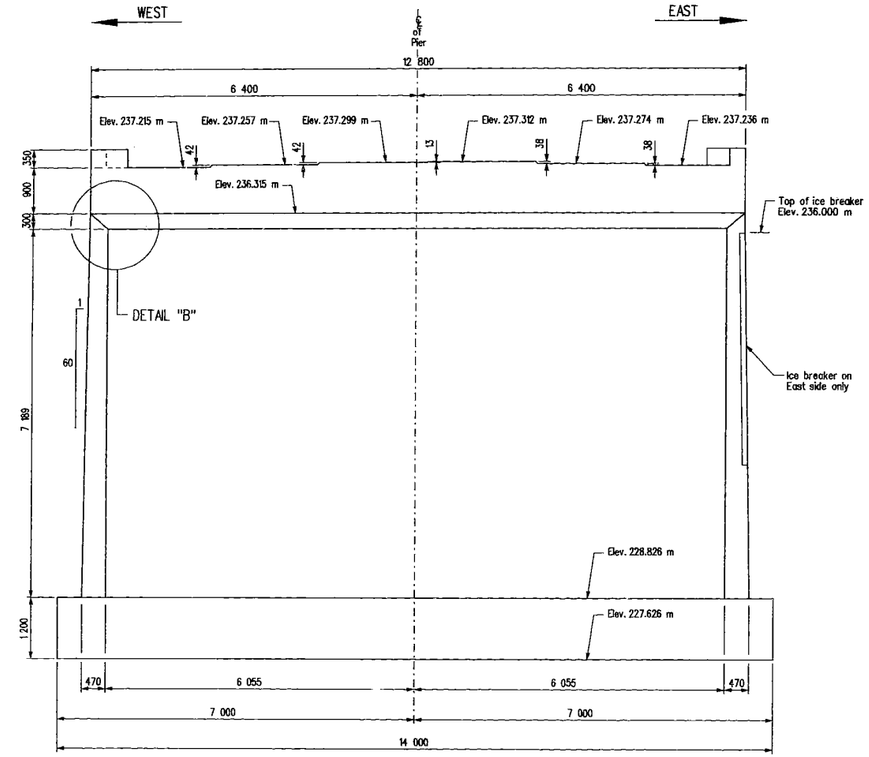

ELEVATION

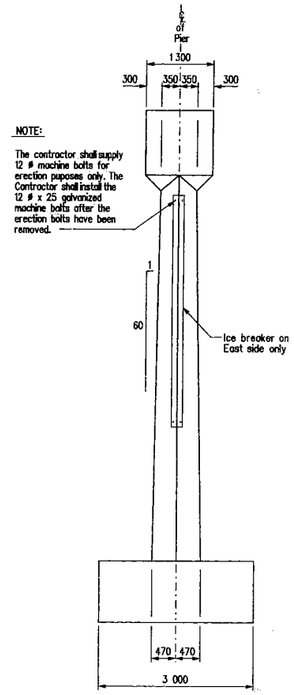

END ELEVATION

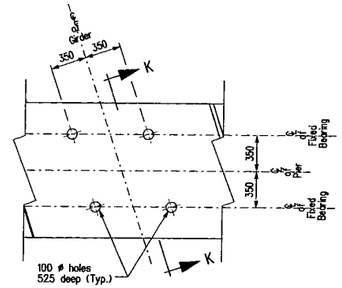

DETAIL "C"

Scale 1 : 25

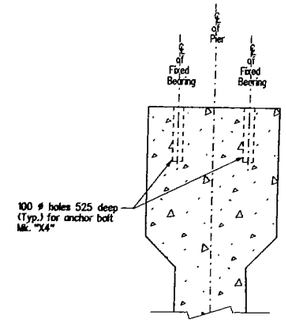

SECTION K-K

Scale 1 : 25

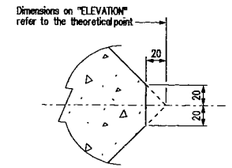

PIER NOSE DETAILS

Scale 1 : 2.5

NOTE:

1. All exposed edges to be chamfered 20 mm unless otherwise noted.
2. For Bill of Reinforcing Steel see Sheet No. 24.
3. For Bill of Ice Breaker see Sheet No. 23.
4. For Bill of Miscellaneous Metal for anchor bolts Mk. "X4" see Sheet No. 32.
5. For projection of anchor bolts Mk. "X4" see sheet No. 31.
6. Anchor bolt holes shall be void formed.

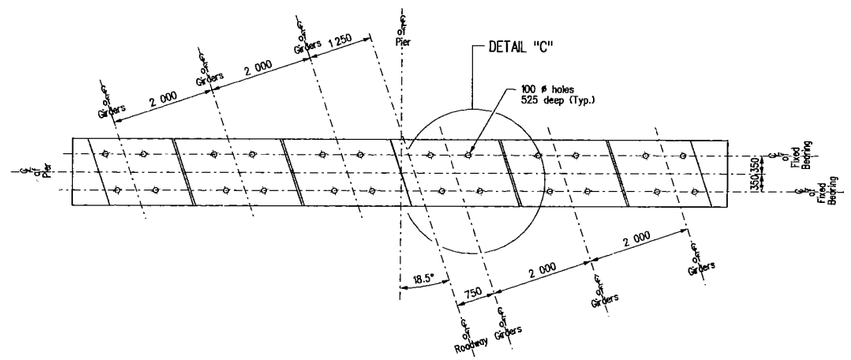

PLAN

Showing layout of fixed bearing anchor bolt holes

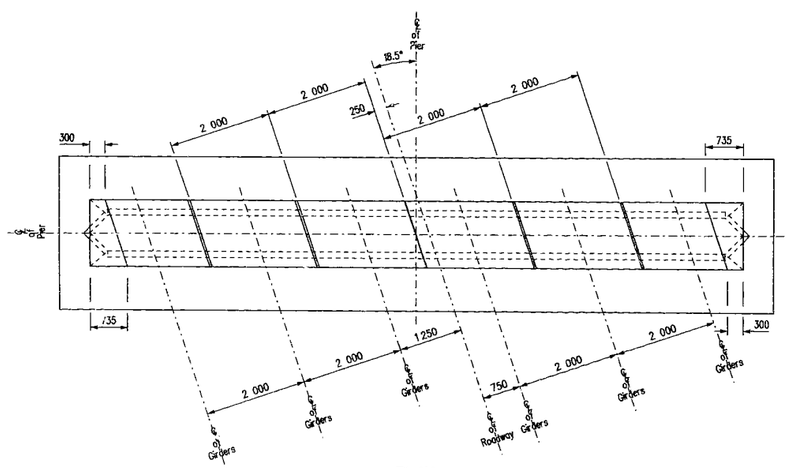

PLAN

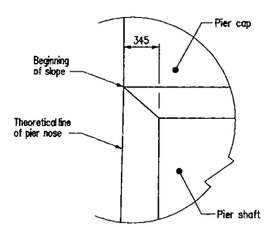

DETAIL "B"

Scale 1 : 25

REVISIONS		
OCT31/07	R.A	AS BUILT
DATE	BY	DESCRIPTION

PROVINCE OF MANITOBA — S.L. DONACHUK — Oct-11/05 — REGISTERED ENGINEER

PIER SU.3 CONCRETE DETAILS

FOR PROPOSED 69 714 LONG R.C. BRIDGE
OVER SEINE RIVER DIVERSION
ON P.T.H. No. 59 SOUTH BOUND LANES, 10 900 ROADWAY
IN SEC. 28-8-4E

R.M. OF RITCHOT

Manitoba Transportation and Government Services
Bridges and Structures Branch

RELEASED FOR CONSTRUCTION BY:
Oct-13/05
DIRECTOR OF BRIDGES AND STRUCTURES — DATE

DESIGN	BY: S.L.D.	SCALE: 1 : 50 or As Shown	SHEET No. 20
	CHECKED: A.H.P.		
DETAILS	BY: M.S.		SITE No. 693-02
	CHECKED: S.L.D.		

fbs_sales\693\02\08\302pier.dgn 10/11/2005 9:03:34 AM