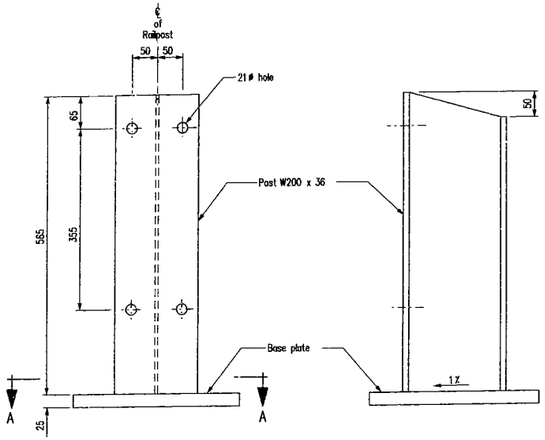

FRONT ELEVATION

SIDE VIEW

RAILPOST Mk."RP1"

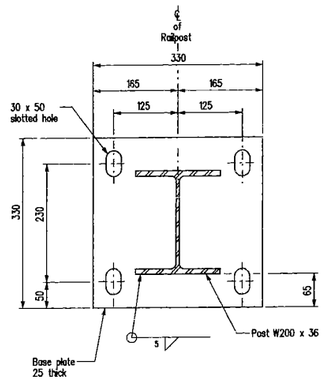

SECTION A-A

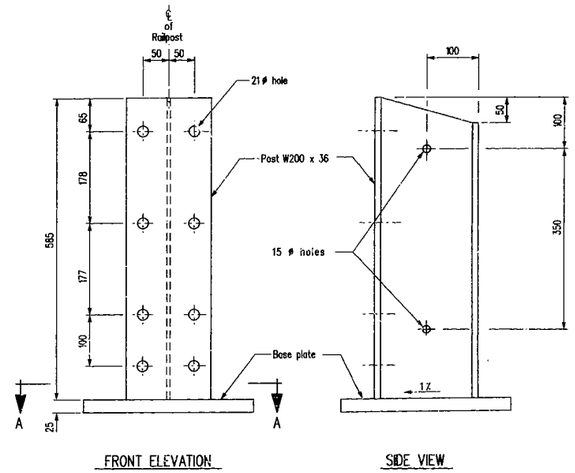

FRONT ELEVATION

SIDE VIEW

RAILPOST Mk."RP2"

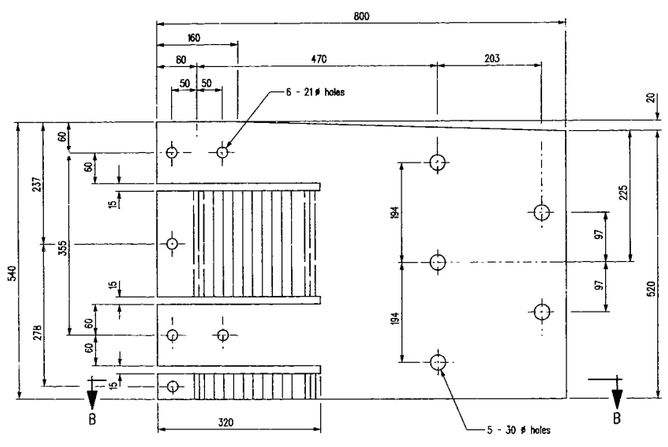

ELEVATION

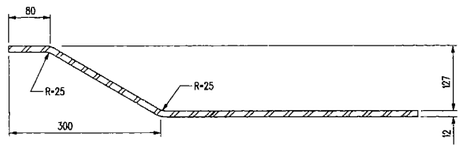

SECTION B-B

CONNECTION PLATE Mk."CP1" & "CP2"

NOTE : Mk."CP1" shown , Mk."CP2" opposite hand .

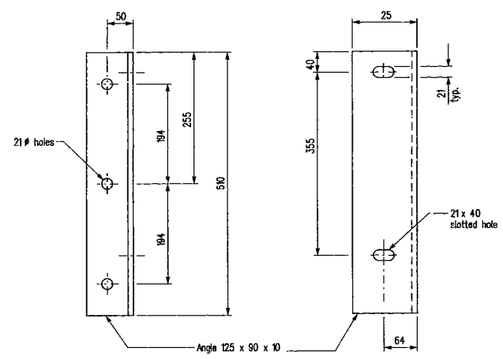

CONNECTION ANGLE Mk."CA1" & "CA2"

NOTE : Mk."CA1" shown , Mk."CA2" opposite hand .

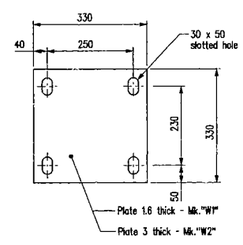

SHIM MK."W1" & "W2"

NOTE : Provide two Mk."W1" and one Mk."W2" shims for 25% of the railposts .
Scale 1 : 7.5

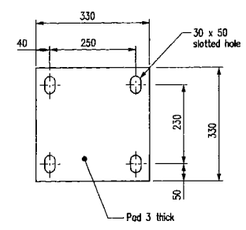

FABRIC BEARING PAD

Scale 1 : 7.5

BILL OF MISCELLANEOUS METAL

SITE No. 693-01

Mk.	No.	DESCRIPTION	SIZE	MASS PER UNIT	TOTAL MASS
RP1	54	Railposts - galvanized			2183.65
		Each railpost to be fabricated from :			
		Post	W200 x 36 , 585 long As detailed	20.092	
		Base plate	PL25 thick As detailed	20.346	
			Total	40.438	
RP2	4	Railposts - galvanized			
		Each railpost to be fabricated from :			161.25
		Post	W200 x 36 , 585 long As detailed	19.966	
		Base plate	PL25 thick As detailed	20.346	
			Total	40.312	
					473.57
Q1	58	Pre-set anchor unit - galvanized	Acrow Richmond anchor , type DGR-2 (modified as shown) or equivalent , c/w 4-25 ø ASTM A325 bolts , 100 long , 8-plastic cap plugs , plate & lock washers and plywood setting template - as detailed	8.165	
W1	30	Shims - galvanized	PL1.6 thick As detailed	1.302	39.06
W2	15	Shims - galvanized	PL3 thick As detailed	2.442	36.63
BR1	24	Bottom rail - galvanized	HSS 127.0 x 127.0 x 7.95, 8 990 long, As detailed	254.572	6 109.73
BR2	8	do do	HSS 127.0 x 127.0 x 7.95, 5 990 long, As detailed	169.558	1 356.46
BR3		do do	HSS 127.0 x 127.0 x 7.95, _____ long, As detailed		
BR4		do do	HSS 127.0 x 127.0 x 7.95, _____ long, As detailed		
BR5	4	do do	HSS 127.0 x 127.0 x 7.95, 2 426 long, As detailed	68.712	274.85
BR6	8	do do	HSS 127.0 x 127.0 x 7.95, 3 218 long, As detailed	91.942	735.54
BR7	4	do do	HSS 127.0 x 127.0 x 7.95, 2 697 long, As detailed	76.409	305.64
BRS1	4	Sleeve - galvanized	As detailed	71.203	284.81
BRS2		do do			
BRS3	4	do do	As detailed	77.396	309.58
BRS4	28	do do	As detailed	13.340	373.52
CP1	2	Connection plate - galvanized	As detailed	38.770	77.54
CP2	2	Connection plate - galvanized	As detailed	38.770	77.54
CA1	2	Connection angle - galvanized	As detailed	8.012	16.02
CA2	2	Connection angle - galvanized	As detailed	8.012	16.02
C1	288	Bolts - galvanized	19 ø x 165 round head square neck bolt c/w self locking hex nut	0.413	118.94
C2	16	do do	19 ø x 150 hex bolt c/w self locking hex nut	0.522	8.35
C3	20	do do	19 ø x 65 hex bolt c/w self locking hex nut	0.249	4.98
C4	8	do do	19 ø x 50 hex bolt c/w self locking hex nut	0.222	1.78
C5	8	do do	19 ø x 38 hex bolt - no nut	0.145	1.16
	340	Plate washers - galvanized	For 19 ø bolts , 1 per bolt Mk. C1, C2, C3, C4 & C5	0.045	15.30
	8	Lock washers - galvanized	For 19 ø bolts , 1 per bolt Mk. C5	0.019	0.15
	58	Fabric bearing pad	As detailed , Fabreeka SA-47 pad or equivalent		
			Total mass		12 982.07 kg

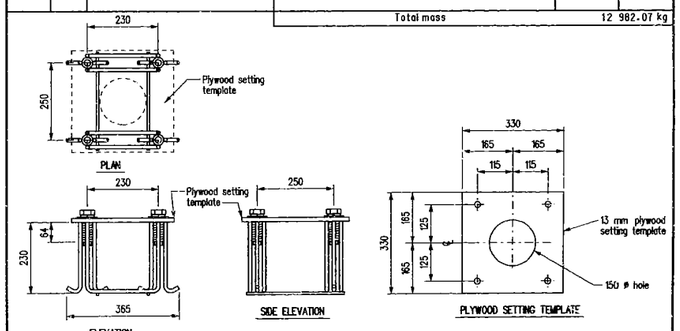

PRE-SET ANCHOR UNIT Mk. "Q1"

NOTES :

1. HSS rail shall conform to CAN/CSA-G40.21-M92 Grade 350W.
2. All steel plates, including sleeve material, shall conform to the requirements of CAN/CSA-40.21-M92 Grade 300W.
3. W200 x 36 railpost shall conform to CAN/CSA-G40.21-M92 Grade 300W.
4. All bolts shall conform to the requirements of ASTM A307 except where noted otherwise.
5. All post & rail sections shall be galvanized after fabrication.
6. All material in the above Bill shall be galvanized in accordance with CAN/CSA-G164-M92.
7. Welding shall meet the current requirements of the American Welding Society, Structural Welding Code ANSI/AASHTO/AWS D.1.5.

NOTE:
Original drawing sealed by B.L. Lau, P. Eng., Sept. 21, 2000.
It is filed in the Bridges and Structures Branch.

REVISIONS

DATE	BY	DESCRIPTION
OCT 31/07	B.A	AS BUILT

STD 2000TL43

PROVINCE OF MANITOBA — A.H. PANKRATZ — OCT 12, 2005 — REGISTERED PROFESSIONAL ENGINEER

RAILPOST DETAILS

FOR PROPOSED 69 714 LONG R.C. BRIDGE
OVER SEINE RIVER DIVERSION
ON P.T.H. No. 59 SOUTH BOUND LANES, 10 900 ROADWAY
IN SEC. 28-6-4E

R.M. OF RITCHOT

Manitoba Transportation and Government Services
Bridges and Structures Branch

RELEASED FOR CONSTRUCTION BY:

Oct. 31/07
DIRECTOR OF BRIDGES AND STRUCTURES — DATE

DESIGN	BY: A.H.P.	SCALE: 1:5 or As Shown	SHEET No. 51
	CHECKED:		
DETAILS	BY: M.S.		SITE No. 693-02
	CHECKED: A.H.P.		

10:\9302\069302\railing.dgn 10/11/2005 9:23:35 AM