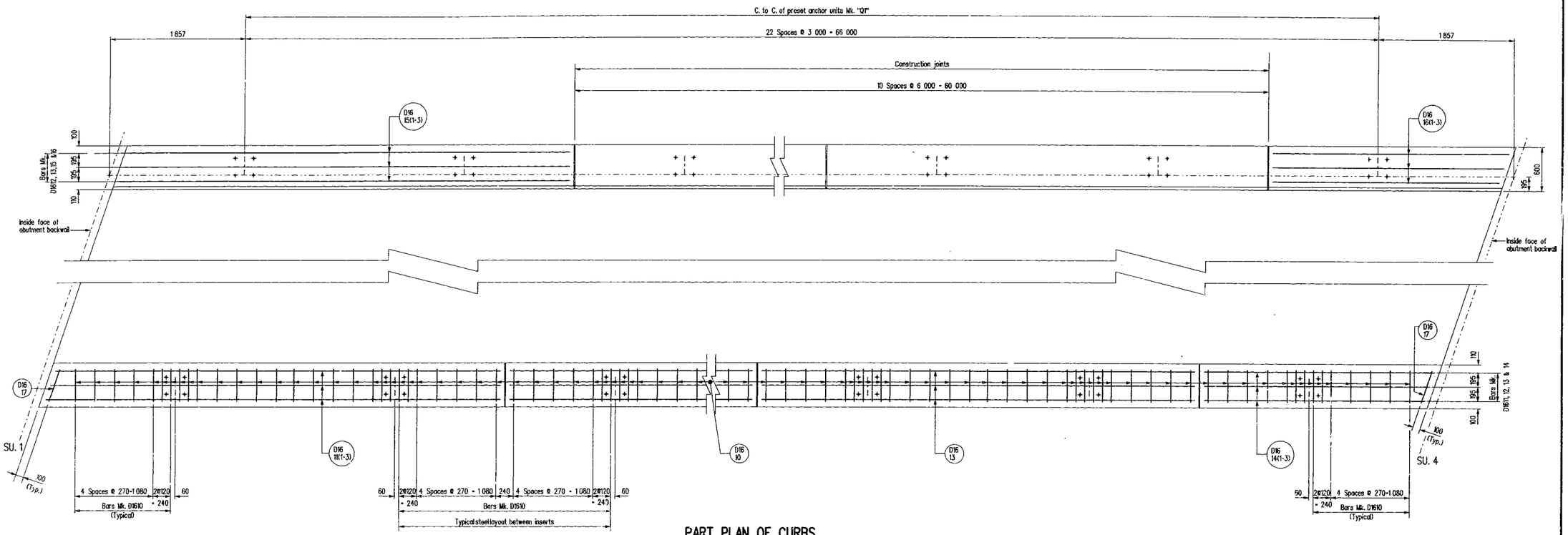

PART PLAN OF CURBS

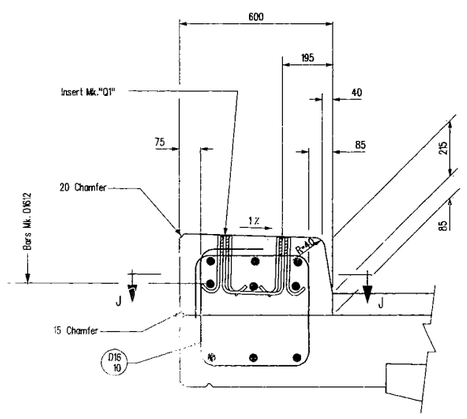

TYPICAL CURB CROSS SECTION

Scale 1 : 10

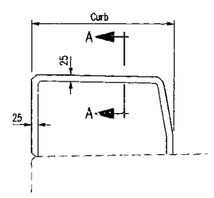

ELEVATION

Scale 1 : 10

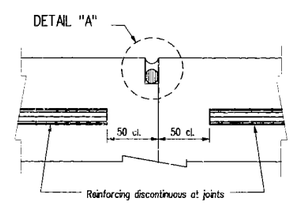

SECTION A-A

Scale 1 : 2.5

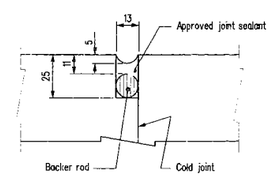

DETAIL "A"

Scale 1 : 1.5

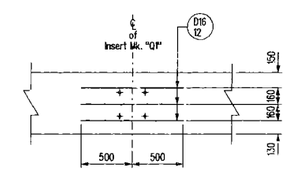

SECTION J - J

CONTRACTION JOINT DETAILS

NOTES :

1. Anchor units Mk. "Q1" shall be erected before placing longitudinal reinforcing in curbs.
2. All exposed edges shall be chamfered 20 mm unless noted otherwise.
3. Concrete cover shall be 60 mm unless noted otherwise.
4. For joint details see Sheets No. 48 & 49.
5. For reinforcing bars Mk. D1610, D1611, D1612, D1613, D1614, D1615, D1616, D1617 see Bill of Reinforcing Steel Sheet No. 37
6. For curb concrete volume and area of permeable formwork liner finish see Bill of Reinforcing Steel Sheet No. 37.

REVISIONS		
OCT31/07	R.A	AS BUILT
DATE	BY	DESCRIPTION

PROVINCE OF MANITOBA — A.H. PANKRATZ — Oct 12, 2005 — REGISTERED PROFESSIONAL ENGINEER

CURB DETAILS

FOR PROPOSED 69 714 LONG R.C. BRIDGE
OVER SEINE RIVER DIVERSION
ON P.T.H. No. 59 SOUTH BOUND LANES, 10 900 ROADWAY
IN SEC. 28-8-4E

R.M. OF RITCHOT

Manitoba Transportation and Government Services
Bridges and Structures Branch

RELEASED FOR CONSTRUCTION BY:
DIRECTOR OF BRIDGES AND STRUCTURES — DATE

DESIGN	BY: A.H.P.	
	CHECKED: J.B.L.	
DETAILS	BY: G.S.	
	CHECKED: A.H.P.	

SCALE: 1 : 25 or as shown

SHEET No. 36

SITE No. 693-02