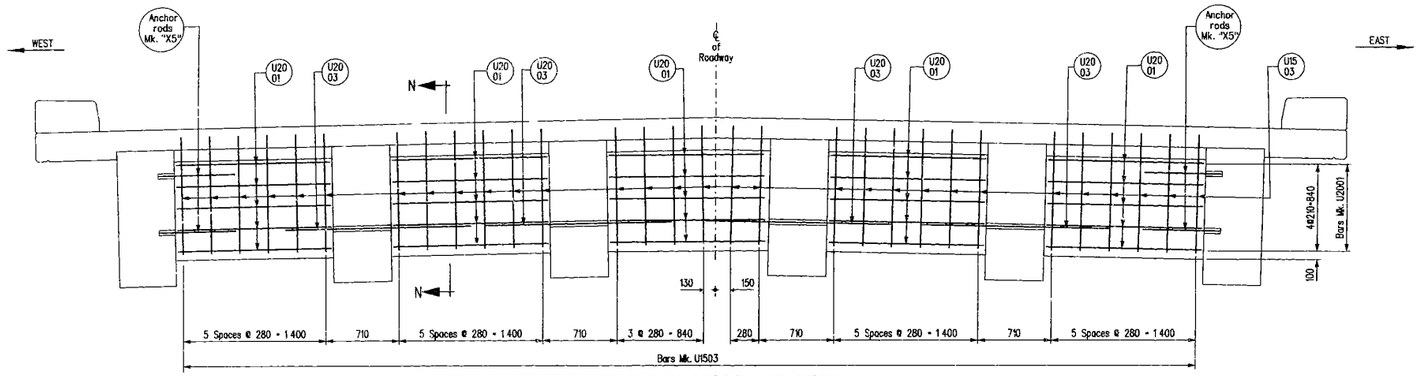

ELEVATION OF END DIAPHRAGM AT PIERS

Elevation shown is on skew

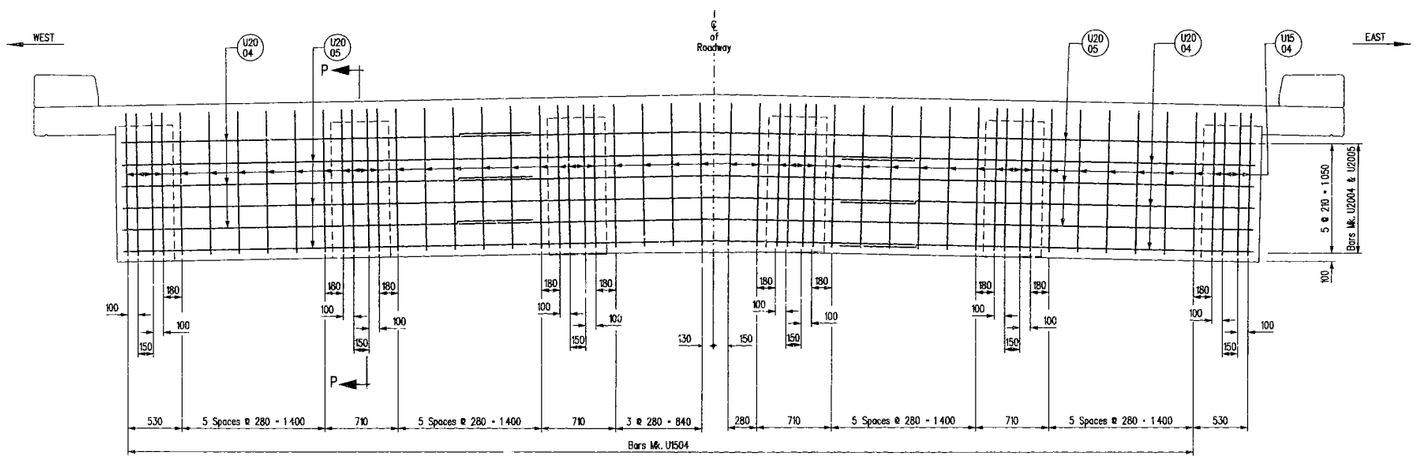

CROSS SECTION ON ℄ OF END DIAPHRAGM AT PIERS

Section shown is on skew

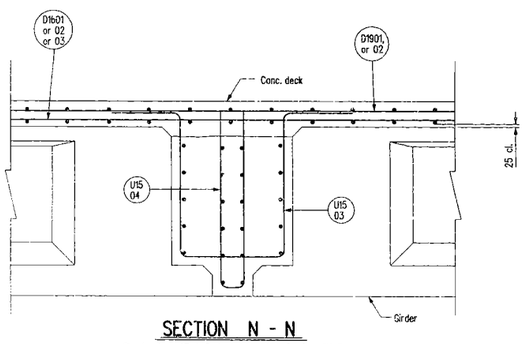

SECTION N - N

Showing typical End diaphragm on piers SU. 2 & SU. 3
Scale 1:20

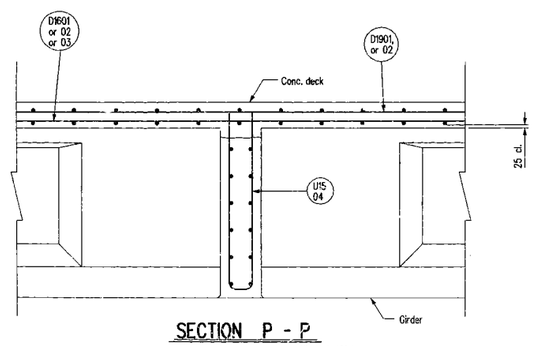

SECTION P - P

Showing typical End diaphragm on piers SU. 2 & SU. 3
Scale 1:20

Diaphragm Reinforcing — SITE No. 693-01

MARK	No.	TYPE	LENGTH	MASS
U1501	60	BENT	2 820	265.64
U1502	180	BENT	3 260	921.28
U1503	60	BENT	4 250	400.35
U1504	108	BENT	2 980	505.29
U2001	180	STR	1 500	635.85
U2002	240	STR	1 850	1045.62
U2003	80	STR	1 800	339.12
U2004	24	STR	4 000	226.08
U2005	24	STR	7 700	435.20

BENDING DIAGRAM

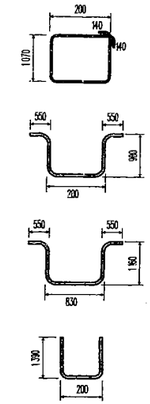

Total mass of reinforcing steel	4 774.43 kg
Total volume of structural concrete	37.05 m³

NOTES:

1. All dimensions given in bending diagrams are out to out, except radiuses. Radiuses are inside dimensions.
2. All reinforcing steel shall be deformed steel, unless noted otherwise in the above Bill of Reinforcing Steel.
3. All reinforcing steel shall conform to CAN/CSA G30.18-M92 Grade 400W, unless noted otherwise in the above Bill of Reinforcing Steel.
4. The dimensions provided use the minimum bend diameters (D) permitted in CAN/CSA - S6 - 00 for Grade 400W reinforcing steel.
5. Like bars shall be bundled, securely tied and identified as to Mark and Site No. by appropriate means. All other items to identified in a similar fashion.

BILL OF MISCELLANEOUS METAL - For Diaphragms — SITE No. 693-01

MARK	No.	DESCRIPTION	SIZE	LENGTH	MASS PER UNIT	TOTAL MASS
X5	96	Anchor rods (fully threaded rods) A307 or SAE Gr. 2	25ø	750	2.486	238.66
					TOTAL MASS =	238.66 kg

NOTE :
Concrete cover shall be 60 mm unless noted otherwise

REVISIONS

DATE	BY	DESCRIPTION
OCT31/07	R.A	AS BUILT

PROVINCE OF MANITOBA — A. H. PANKRATZ — OCT 12, 2005 — REGISTERED PROFESSIONAL ENGINEER

DIAPHRAGM REINFORCING DETAILS

FOR PROPOSED 69 714 LONG R.C. BRIDGE
OVER SEINE RIVER DIVERSION
ON P.T.H. No. 59 SOUTH BOUND LANES, 10 900 ROADWAY
IN SEC. 28-8-4E

R.M. OF RITCHOT

Manitoba Transportation and Government Services
Bridges and Structures Branch

RELEASED FOR CONSTRUCTION BY:
DIRECTOR OF BRIDGES AND STRUCTURES — DATE

DESIGN	BY: A.H.P.	SCALE: 1:25 or as shown
	CHECKED: J.B.L.	SHEET No. 40
DETAILS	BY: C.S.	SITE No. 693-02
	CHECKED: A.H.P.	

D:\SDG\Diaphragm rev1-2.dgn 10/11/2006 9:03:22 AM