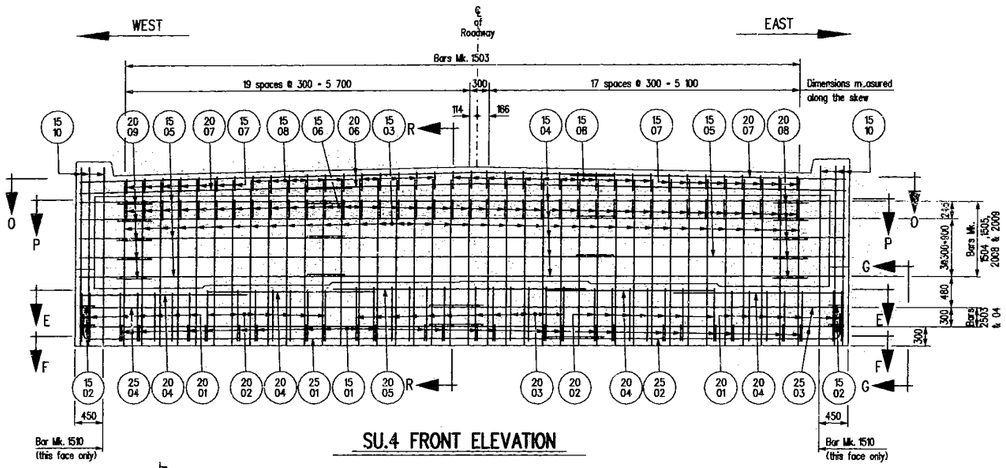

SU.4 FRONT ELEVATION

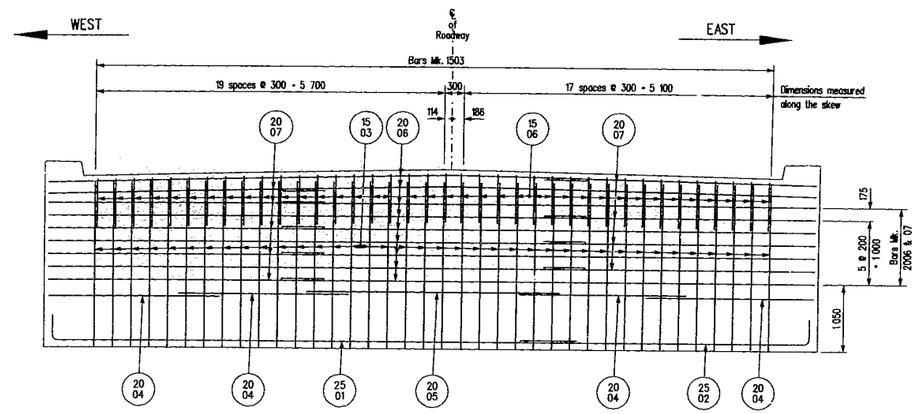

SECTION S-S

Showing reinforcing steel in REAR face of abutment SU.4 backwall.

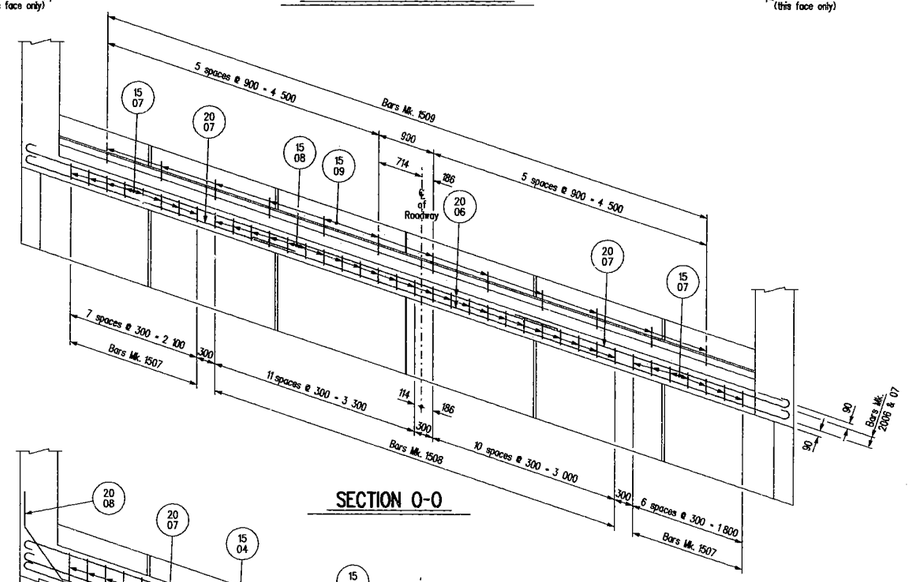

SECTION O-O

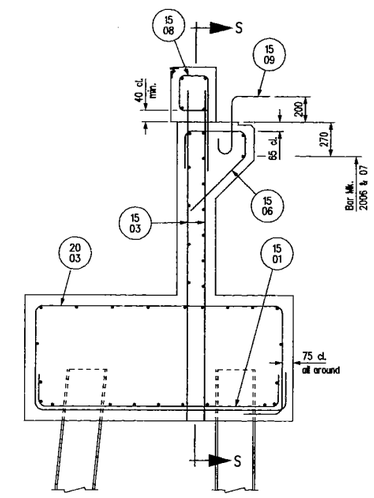

SECTION R-R

Scale 1:20

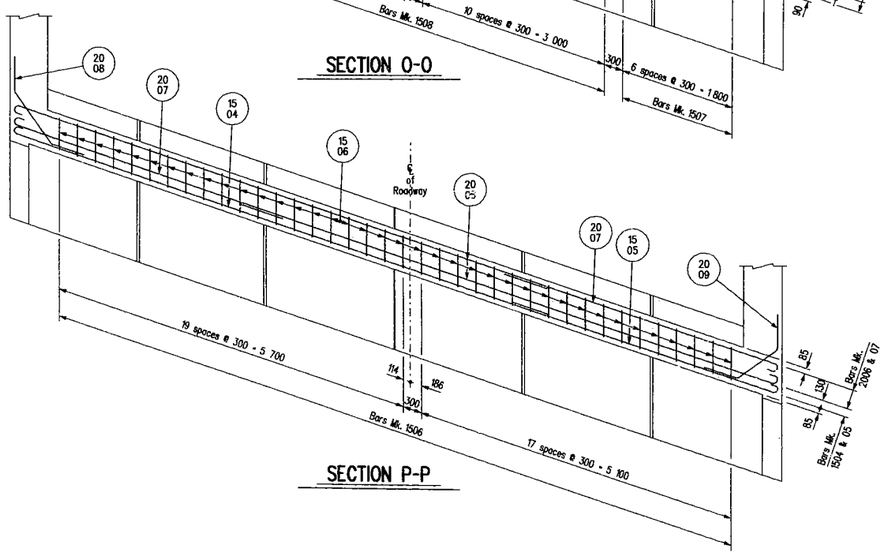

SECTION P-P

NOTES:

1. Concrete cover shall be 60 mm unless noted otherwise.
2. Minimum lap length for 25M bars = 860 mm
   for 20M bars = 670 mm
   for 15M bars = 550 mm.
3. For SECTIONS E-E, F-F & G-G see Sheet No. 16.
4. For BILL OF REINFORCING STEEL see Sheets No. 17 & 18.
5. Bars may be shifted slightly as required to allow accurate placement of anchor rods Mk. "X3".

REVISIONS		
OCT 31/07	R.A	AS BUILT
DATE	BY	DESCRIPTION

PROVINCE OF MANITOBA — A. H. PANKRATZ — Oct 11, 2005 — REGISTERED PROFESSIONAL ENGINEER

ABUTMENT REINFORCING DETAILS FOR SU.4

FOR PROPOSED 69 714 LONG R.C. BRIDGE
OVER SEINE RIVER DIVERSION
ON P.T.H. No. 59 SOUTH BOUND LANES, 10 900 ROADWAY
IN SEC. 28-8-4E

R.M. OF RITCHOT

Manitoba Transportation and Government Services
Bridges and Structures Branch

RELEASED FOR CONSTRUCTION BY:
DIRECTOR OF BRIDGES AND STRUCTURES — DATE

DESIGN	BY: AHP	SCALE: 1:40 or As Shown	SHEET No. 14
	CHECKED: JJL		
DETAILS	BY: D.P.W.		SITE No. 693-02
	CHECKED: AHP		

..\693\02\693\02abutment.dgn 10/11/2005 9:02:56 AM