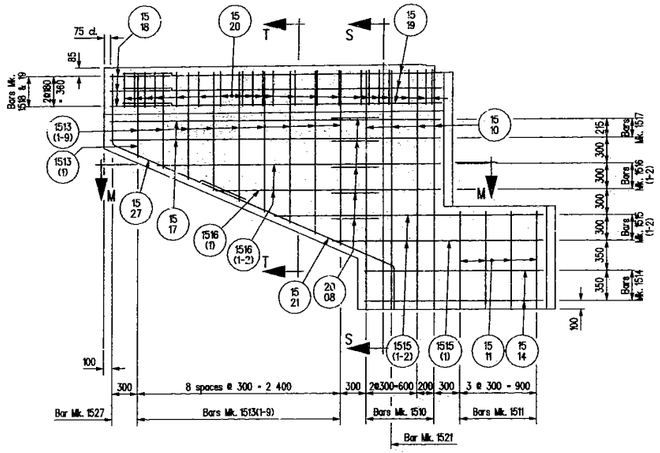

SIDE ELEVATION

Showing reinforcing steel in OUTSIDE FACE of abutment SU.4 WEST wingwall.

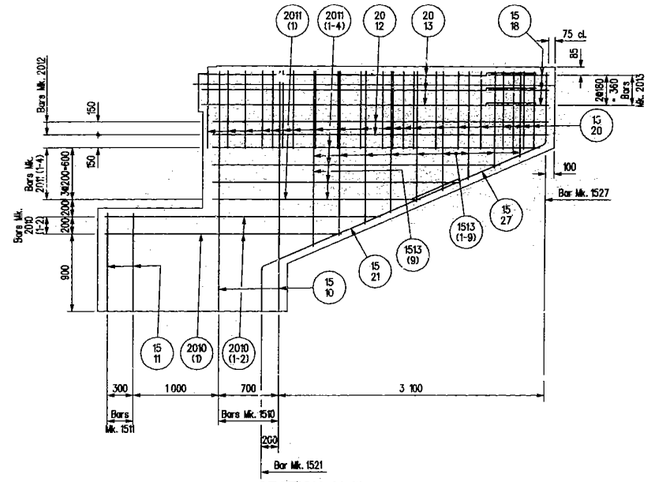

SECTION U-U

Showing reinforcing steel in INSIDE FACE of abutment SU.4 WEST wingwall.

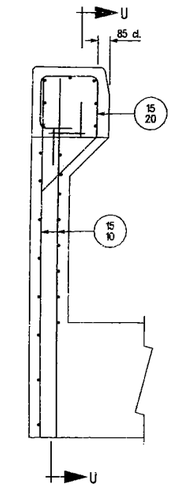

SECTION S-S

Scale 1:20

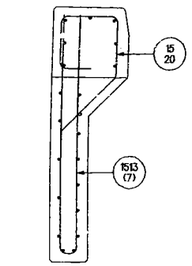

SECTION T-T

Scale 1:20

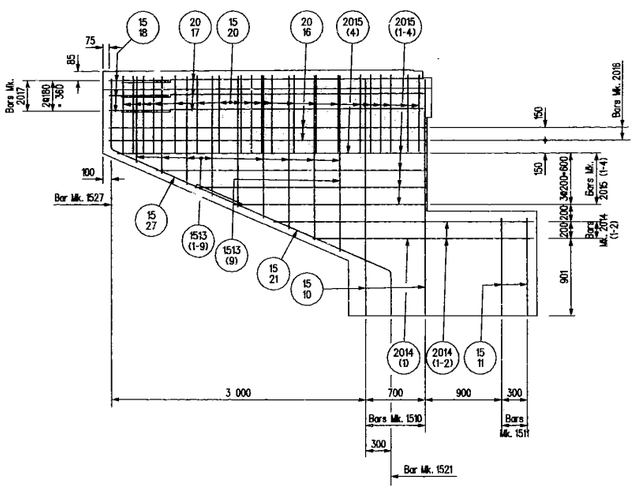

SECTION U-U

Showing reinforcing steel in INSIDE FACE of abutment SU.4 EAST wingwall.

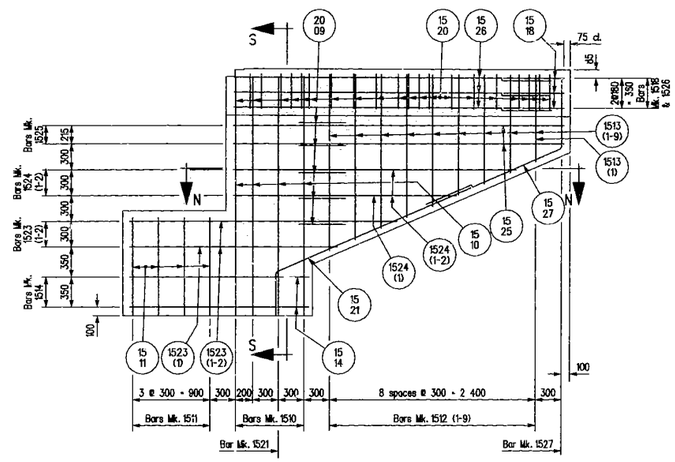

SIDE ELEVATION

Showing reinforcing steel in OUTSIDE FACE of abutment SU.4 EAST wingwall.

NOTE:

For SECTIONS M-M, N-N and PLAN OF CURBS see Sheet No. 13.

REVISIONS		
OCT31/07	R.A	AS BUILT
DATE	BY	DESCRIPTION

PROVINCE OF MANITOBA — A. H. PANKRATZ — Oct 12, 2009 — REGISTERED PROFESSIONAL ENGINEER

ABUTMENT REINFORCING DETAILS FOR SU.4

FOR PROPOSED 69 714 LONG R.C. BRIDGE
OVER SEINE RIVER DIVERSION
ON P.T.H. No. 59 SOUTH BOUND LANES, 10 900 ROADWAY
IN SEC. 28-8-4E

R.M. OF RITCHOT

Manitoba Transportation and Government Services
Bridges and Structures Branch

RELEASED FOR CONSTRUCTION
BY:
DIRECTOR OF BRIDGES AND STRUCTURES — DATE

DESIGN	BY: A.H.P.	SCALE: 1:40 or As Shown
	CHECKED: J.G.L.	SHEET No. 15
DETAILS	BY: D.P.W.	SITE No. 693-02
	CHECKED: A.H.P.	

V:\69302\068002\abutment.dgn 10/11/2006 9:02:56 AM