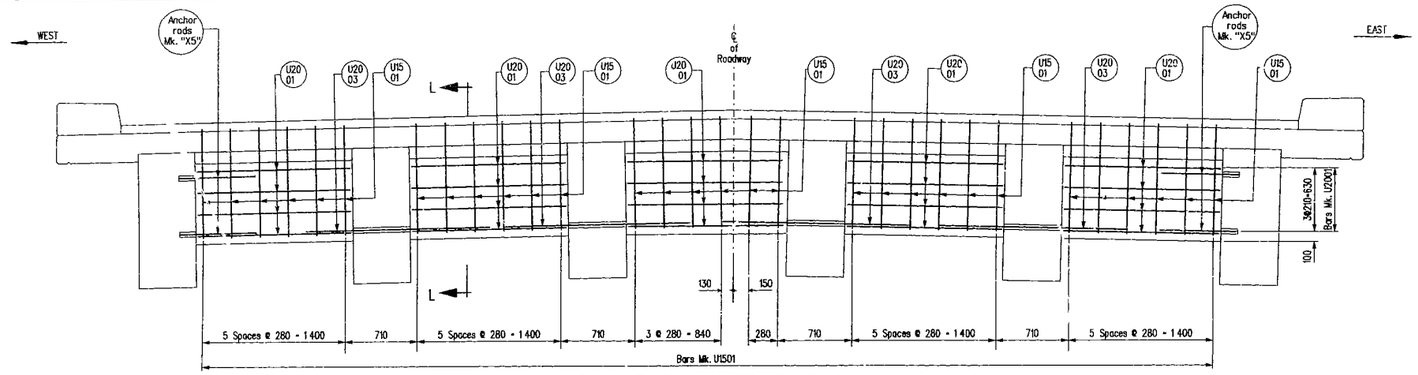

ELEVATION OF END DIAPHRAGM AT ABUTMENTS

Elevation shown is on skew

ELEVATION OF INTERMEDIATE DIAPHRAGMS

Elevation shown is on skew

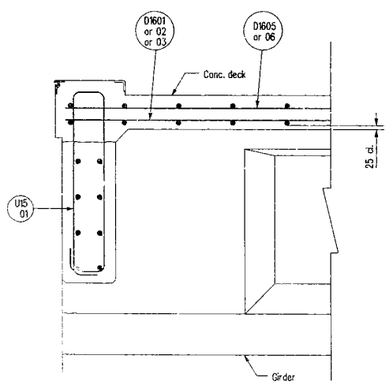

SECTION L - L

Showing typical end diaphragms at SU. 1 & SU. 4
Scale 1 : 15

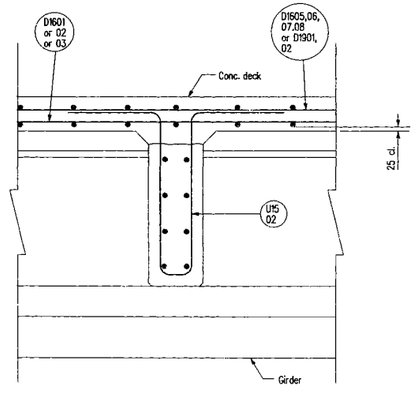

SECTION M - M

Showing typical intermediate diaphragms.
Scale 1 : 15

NOTE :
Concrete cover shall be 60 mm unless noted otherwise

REVISIONS		
OCT 31/07	R.A	AS BUILT
DATE	BY	DESCRIPTION

PROVINCE OF MANITOBA — A. H. PANKRATZ — Oct 13, 2005 — REGISTERED PROFESSIONAL ENGINEER

DIAPHRAGM REINFORCING DETAILS

FOR PROPOSED 69 714 LONG R.C. BRIDGE
OVER SEINE RIVER DIVERSION
ON P.T.H. No. 59 SOUTH BOUND LANES, 10 900 ROADWAY
IN SEC. 28-8-4E

R.M. OF RITCHOT

Manitoba Transportation and Government Services
Bridges and Structures Branch

RELEASED FOR CONSTRUCTION BY:
Oct. 13/05
DIRECTOR OF BRIDGES AND STRUCTURES — DATE

DESIGN	BY: A.H.P.	SCALE: 1:25 or as shown	SHEET No. 39
	CHECKED: J.B.L.		
DETAILS	BY: C.S.		SITE No. 693-02
	CHECKED: A.H.P.		