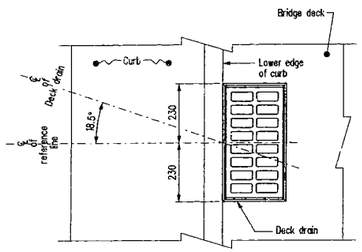

PLAN

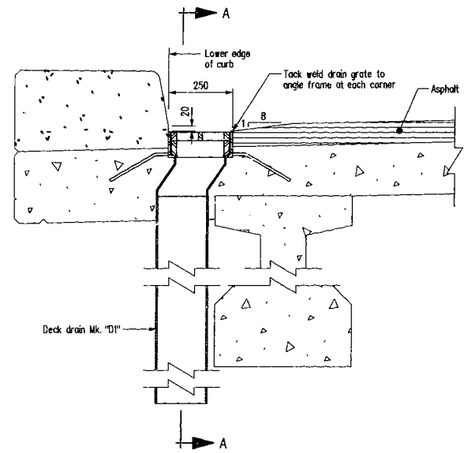

CROSS SECTION

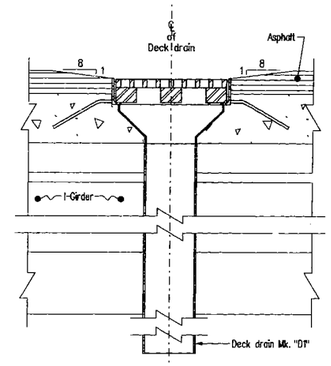

SECTION A-A

ERECTION DETAILS

BILL OF MISCELLANEOUS METAL
FOR DECK DRAINS

SITE No. 693-02

Mk.	No.	DESCRIPTION	SIZE	COMPONENT MASS	TOTAL MASS
D1	8	Deck drains	As detailed (completely galvanized)	90.759	726.07
	8	Deck grates	As detailed (completely galvanized)	16.795	134.36
				Total =	860.43 kg

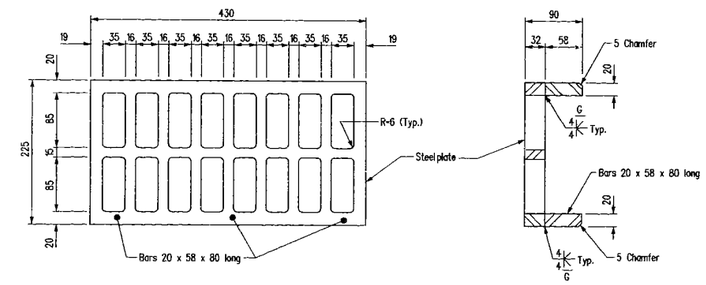

PLAN

SECTION

DETAILS OF DRAIN GRATE
Scale 1:4

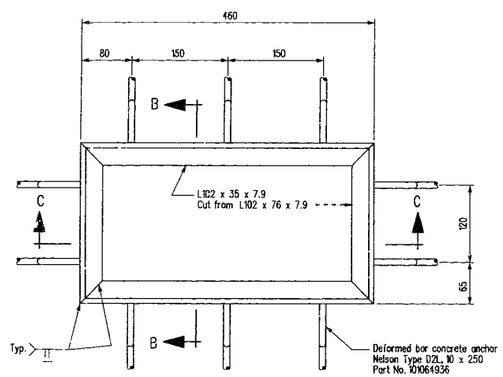

PLAN

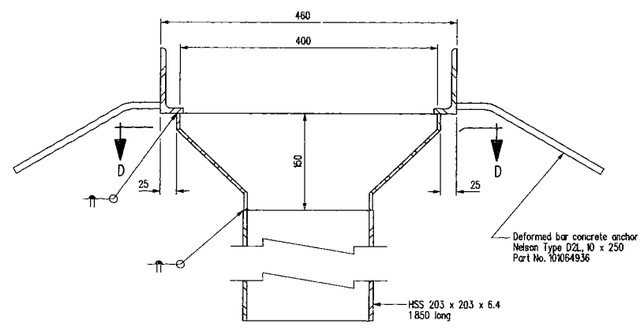

SECTION C-C

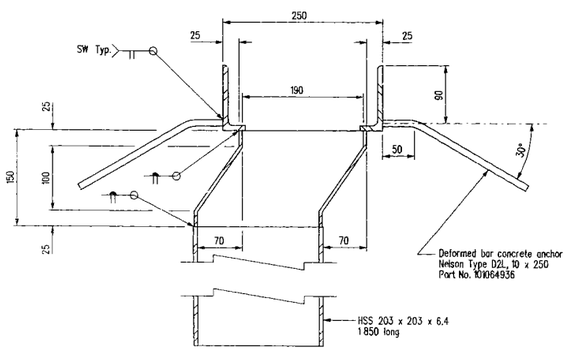

SECTION B-B

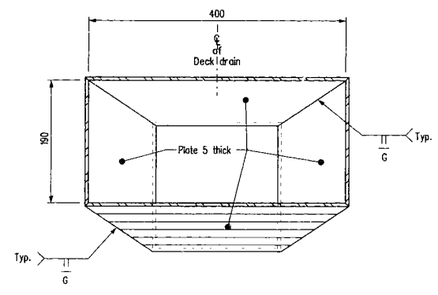

SECTION D-D

DETAILS OF DECK DRAIN Mk. "D1"
Scale 1:4

NOTES :

1. Apply Galvalloy to all field welds and areas where galvanizing has been damaged.
2. Seal all welded joints prior to galvanizing.
3. All material in the above Bill shall be galvanized in accordance with CAN/CSA-G164-M92

REVISIONS		
OCT 31/07	R.A	AS BUILT
DATE	BY	DESCRIPTION

DECK DRAIN DETAILS

FOR PROPOSED 69 714 LONG R.C. BRIDGE
OVER SEINE RIVER DIVERSION
ON P.T.H. No. 59 SOUTH BOUND LANES, 10 900 ROADWAY
IN SEC. 28-8-4E

R.M. OF RITCHOT

Manitoba Transportation and Government Services
Bridges and Structures Branch

PROVINCE OF MANITOBA — A. H. PANKRATZ — Oct 12, 2005 — REGISTERED PROFESSIONAL ENGINEER

RELEASED FOR CONSTRUCTION BY:

Oct. 31/05
DIRECTOR OF BRIDGES AND STRUCTURES — DATE

DESIGN	BY: A.H.P.	SCALE: 1:10 or as shown	SHEET No. 41
	CHECKED:		
DETAILS	BY: M.S.		SITE No. 693-02
	CHECKED: A.H.P.		

693-02 GA\02dclk drain.dgn 10/11/2005 9:03:14 AM