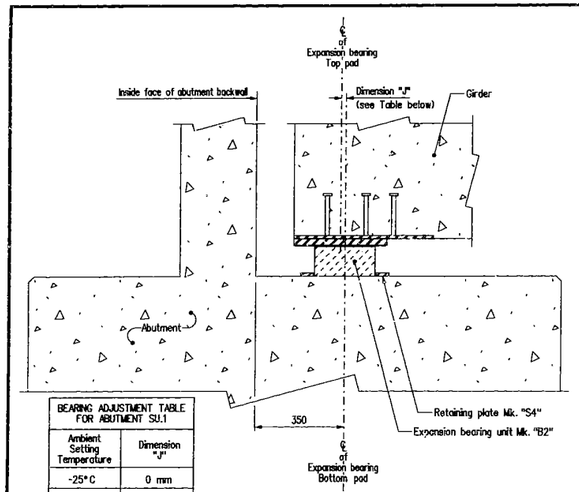

BEARING ADJUSTMENT TABLE FOR ABUTMENT SU.1	
Ambient Setting Temperature	Dimension "J"
-25°C	0 mm
-15°C	4 mm
-5°C	9 mm
5°C	13 mm
15°C	18 mm
25°C	23 mm

SECTION A-A

Typical at SU.1

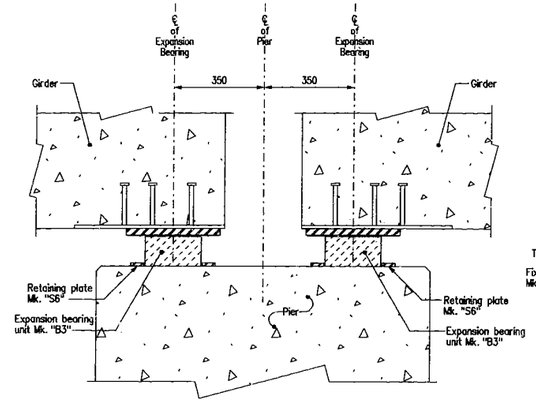

SECTION B-B

Typical at SU.2

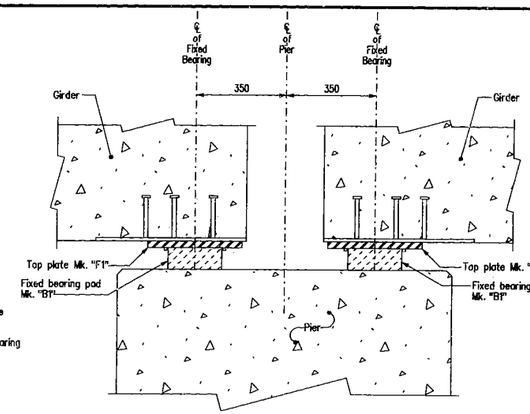

SECTION C-C

Typical at SU.3

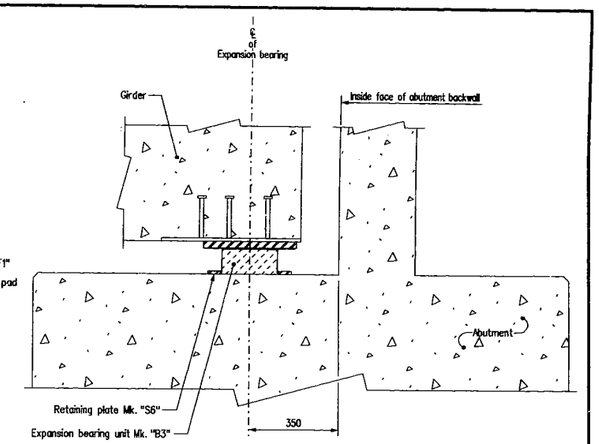

SECTION D-D

Typical at SU.4

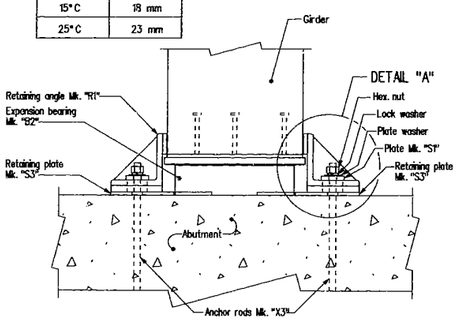

SECTION E-E

Typical at abutment SU.1

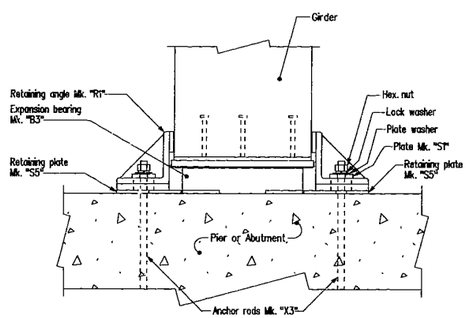

SECTION F-F

Typical at pier SU.2 & abutment SU.4

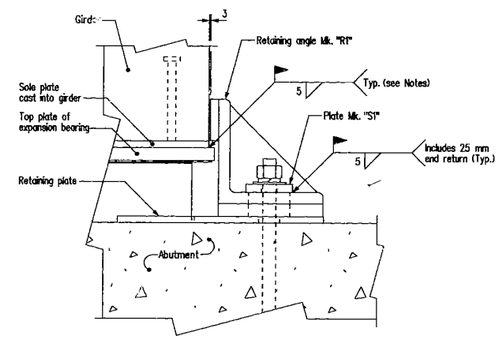

DETAIL "A"

Abutment SU.1 shown.
Similar at pier SU.2 & abutment SU.4.
Scale 1:5

RETAINING ANGLE DETAILS

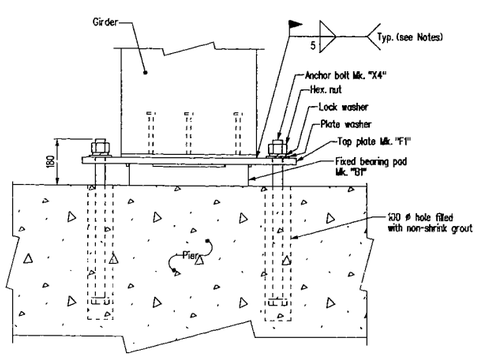

SECTION G-G

Showing Fixed Bearing Assembly at SU.3

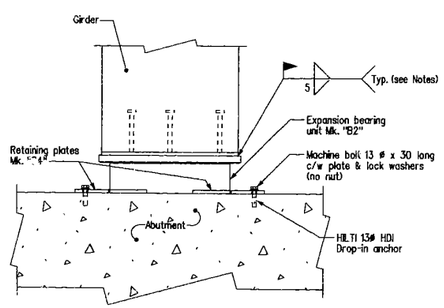

SECTION H-H

Showing Expansion Bearing Assembly at SU.1

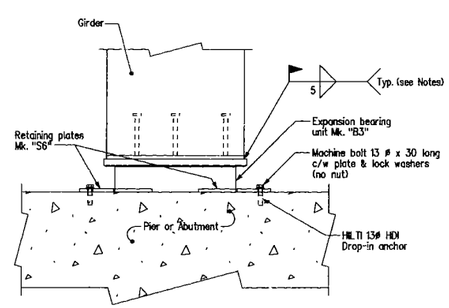

SECTION J-J

Showing Expansion Bearing Assembly at SU.2 & SU.4

BEARING AND GIRDER ERECTION PROCEDURES

1. The fixed bearing pads at SU.3 with top plates Mk. "F1" shall be installed completely as detailed.
2. The bottom pad of expansion bearings shall be placed at SU.1, SU.2 & SU.4 as detailed.
3. Retaining plates Mk. "S3" at SU.1 and "S5" at SU.2 & SU.4 shall be completely installed using retaining plates as templates to locate holes for HILTI Drop-in anchors.
4. For pier SU.2 and abutment SU.4 expansion bearings, the top plate of expansion bearing units must be centered on bottom pad and in full contact with sole plate of girder. Temperature adjustment is not required.
5. For abutment SU.1, top plate of expansion bearing unit must be located as detailed for ambient temperature as shown in temperature adjustment chart in details.
6. All welds between sole plate in girders and top plate of bearings shall be done as soon as possible after girder erection.
7. Concrete between ends of girders at piers SU.2 & SU.3 and in diaphragms of abutments and piers shall be placed as soon as possible after girder erection to establish fixity and maintain set of bearings.
8. Girder retaining angles shall be completely installed as per details. Apply Galvalloy to all field welds and areas where galvanizing has been damaged.

NOTES:

1. For Bill of Miscellaneous Metal see Sheet No. 32.
2. For details of angle Mk. "R1" and plates Mk. "S1" through "S6" see Sheet No. 32.
3. For details of top plate Mk. "F1" see Sheet No. 32.
4. For locations of SECTIONS A-A to J-J see Sheet No. 30.

REVISIONS		
OCT31/07	R.A	AS BUILT
DATE	BY	DESCRIPTION

PROVINCE OF MANITOBA — A. H. PANKRATZ — Oct 12, 2005 — REGISTERED PROFESSIONAL ENGINEER

BEARING DETAILS

FOR PROPOSED 69 714 LONG R.C. BRIDGE
OVER SEINE RIVER DIVERSION
ON P.T.H. No. 59 SOUTH BOUND LANES, 10 900 ROADWAY
IN SEC. 28-8-4E

R.M. OF RITCHOT

Manitoba Transportation and Government Services
Bridges and Structures Branch

RELEASED FOR CONSTRUCTION BY:
Oct. 13/05
DIRECTOR OF BRIDGES AND STRUCTURES — DATE

DESIGN	BY: A.H.P.	
	CHECKED: J.B.L.	
DETAILS	BY: D.P.W.	
	CHECKED: A.H.P.	

SCALE: 1:10 or As Shown
SHEET No. 31
SITE No. 693-02

J:\0693\02\0693\02\bearinon.dgn 10/12/2005 9:18:59 AM