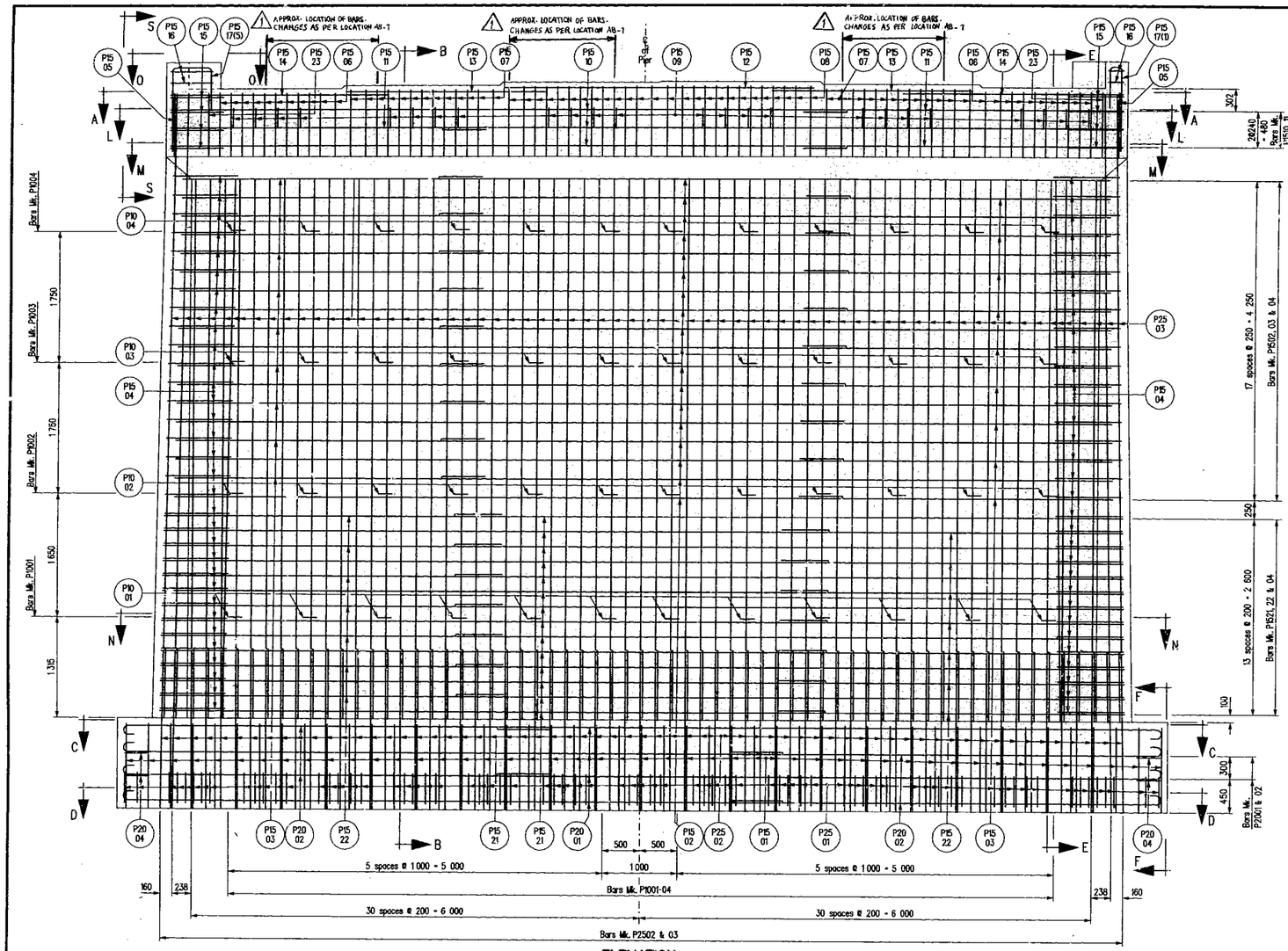

ELEVATION

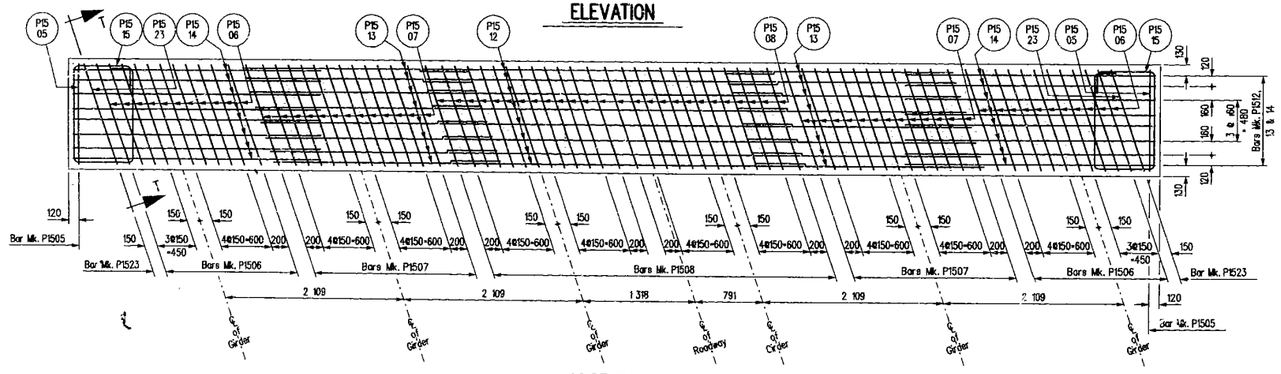

SECTION A-A

Note: Bar modification applies to SV,3 only.

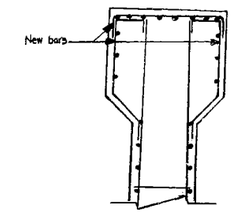

SECTION AB-1

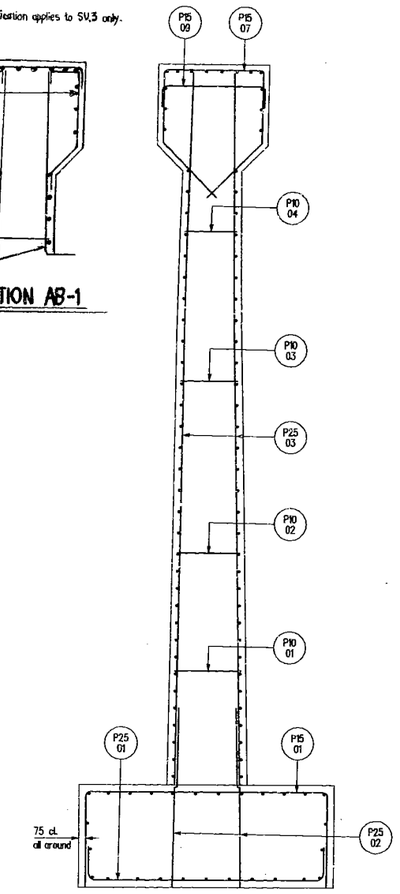

SECTION B-B

NOTES:

1. Concrete cover shall be 60 mm unless noted otherwise.
2. Minimum lap length for - 25M bars = 860 mm
   - 20M bars = 670 mm
   - 15M bars = 550 mm.
3. For SECTIONS C-C, D-D, E-E & END VIEW F-F see Sheet No. 22.
4. For SECTION L-L, PART SECTIONS M-M & N-N and TOP VIEW O-O see Sheet No. 23.
5. For END VIEW S-S & SECTION T-T see Sheet No. 23.
6. For BILL OF REINFORCING STEEL see Sheet No. 24.

REVISIONS		
OCT31/07	R.A	AS BUILT
DATE	BY	DESCRIPTION

PROVINCE OF MANITOBA — S.L. DONACHUK — REGISTERED ENGINEER — Oct 11/05

PIER REINFORCING DETAILS

FOR PROPOSED 69 714 LONG R.C. BRIDGE
OVER SEINE RIVER DIVERSION
ON P.T.H. No. 59 SOUTH BOUND LANES, 10 900 ROADWAY
IN SEC. 28-8-4E

R.M. OF RITCHOT

Manitoba Transportation and Government Services
Bridges and Structures Branch

RELEASED FOR CONSTRUCTION BY:

Oct. 11/05
DIRECTOR OF BRIDGES AND STRUCTURES — DATE

DESIGN	BY: S.L.D.	
	CHECKED: A.I.L.P.	
DETAILS	BY: D.P.W.	
	CHECKED: S.L.D.	

SCALE: 1:30
SHEET No. 21
SITE No. 693-02

bts_sbec:0693C2-06B302per dgn 10/11/2005 9:03:30 AM