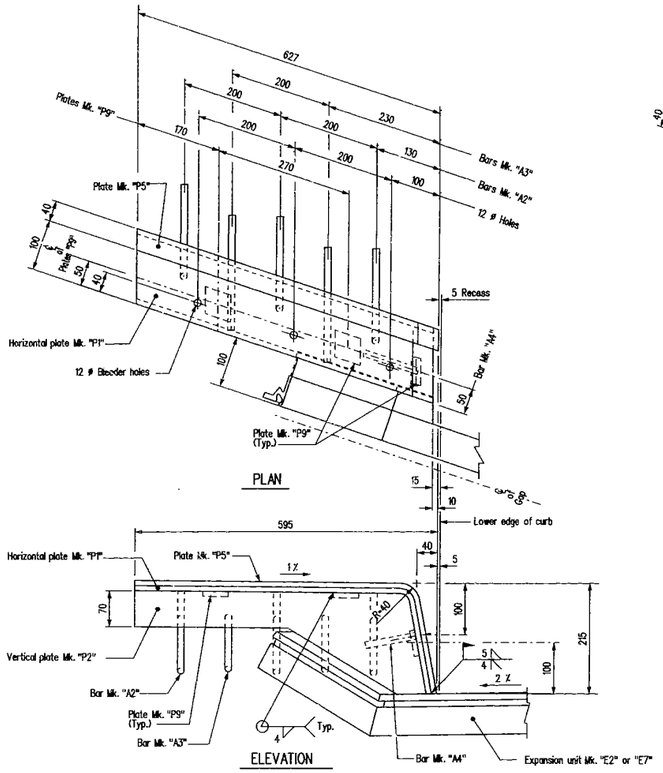

EXPANSION UNIT MK. "E9"

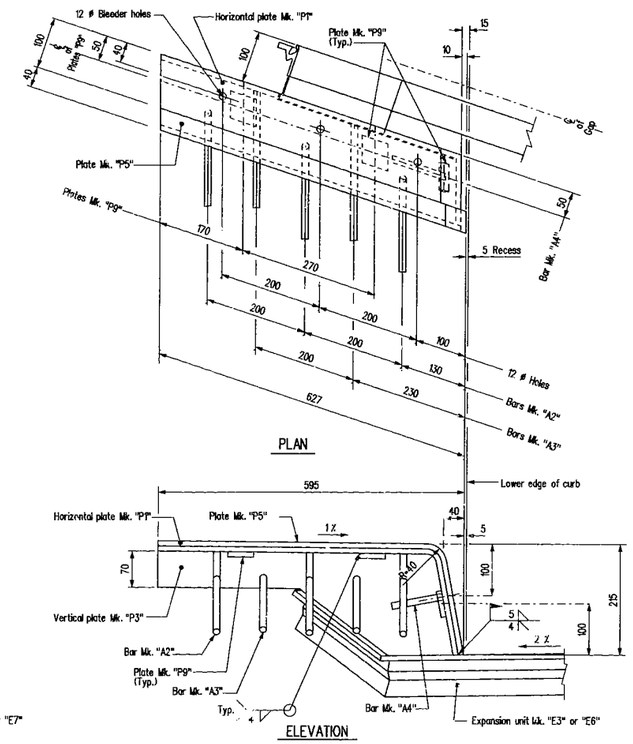

EXPANSION UNIT MK. "E10"

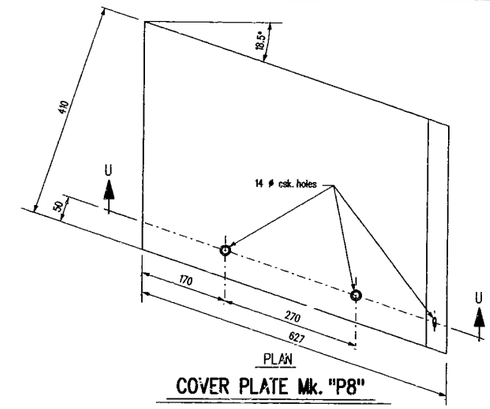

COVER PLATE Mk. "P8"

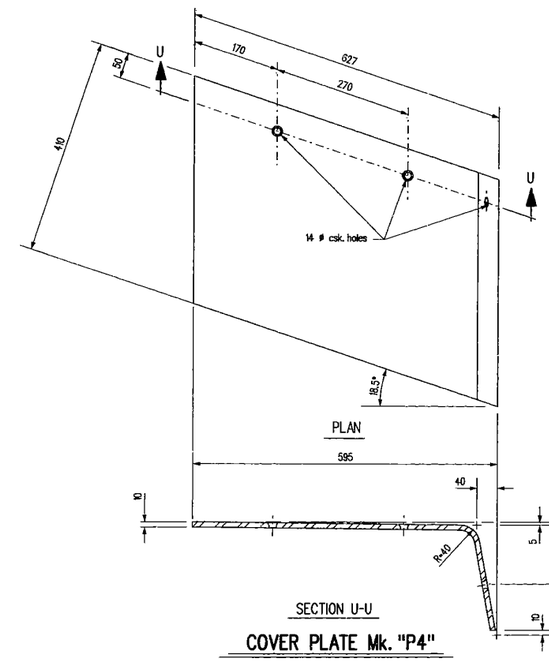

COVER PLATE Mk. "P4"

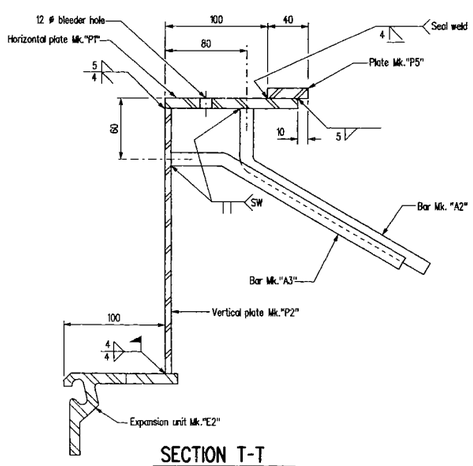

SECTION T-T

Scale 1:2.5

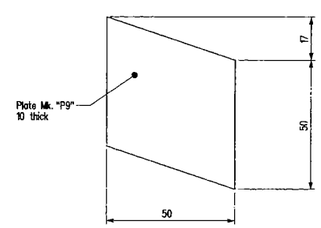

PLATE Mk. "P9"

Scale 1:1

REVISIONS		
OCT31/07	R.A	AS BUILT
DATE	BY	DESCRIPTION

PROVINCE OF MANITOBA — A. H. PANKRATZ — Oct 18, 2005 — REGISTERED PROFESSIONAL ENGINEER

EXPANSION JOINT DETAILS

FOR PROPOSED 69 714 LONG R.C. BRIDGE
OVER SEINE RIVER DIVERSION
ON P.T.H. No. 59 SOUTH BOUND LANES, 10 900 ROADWAY
IN SEC. 28-8-4E

R.M. OF RITCHOT

Manitoba Transportation and Government Services
Bridges and Structures Branch

RELEASED FOR CONSTRUCTION BY:

Oct. 19/05
DIRECTOR OF BRIDGES AND STRUCTURES — DATE

DESIGN	BY: A.H.P.	
	CHECKED: J.B.L.	
DETAILS	BY: G.S.	
	CHECKED: A.H.P.	

SCALE: 1:5
SHEET No. 46
SITE No. 693-02

\ds_sites\69302\69302sp2.dgn 10/11/2005 9:03:25 AM