PLANS

OF PROPOSED

P.P.C.C. BRIDGE OVER [_____]

ON [_____]

LENGTH	36 384 OUT TO OUT OF ABUTMENT PRECAST BACKWALL PANELS
SUPERSTRUCTURE	THREE SIMPLY SUPPORTED SPANS OF PRECAST PRESTRESSED CONCRETE CHANNEL GIRDERS WITH ASPHALT OVERLAY
SUBSTRUCTURE	TWO PRECAST CONCRETE ABUTMENTS AND TWO INTERMEDIATE BENTS WITH STEEL H-PILES
ROADWAY WIDTH	12 000 OUT TO OUT OF GIRDERS
LOCATION	IN R.M. OF [_____]

DESIGN DATA

SPECIFICATIONS

AASHTO LRFD Bridge Design Specifications, First Edition, 1994 plus 1996/97 Interims

VEHICULAR LIVE LOADING

1. Modified AASHTO HSS-25 Truck
2. AASHTO LRFD "HL-93" Loading

STRUCTURAL CONCRETE

CSA A23.1, Exposure Class C-1 Air content category 1

1. PRECAST PRESTRESSED CONCRETE CHANNEL GIRDERS - f'c = 45 MPa at 28 days
   f'ci = 35 MPa at time of de-stressing
2. PRECAST PANELS - f'c = 35 MPa

REINFORCING STEEL

1. PRECAST PRESTRESSED CONCRETE CHANNEL GIRDERS - CAN/CSA-G30.18-M92 Grade 400W black (i.e no epoxy coating)
2. PRECAST PANELS - CAN/CSA-G30.18-M92 Grade 400W black (i.e no epoxy coating)

STRUCTURAL STEEL

1. All Structural Steel shall conform to CAN/CSA G40.21-M92 Grade 300W
2. HSS Tubing for Bridge Rail shall confrom to CAN/CSA- G40.21-M92 Grade 350W

PRESTRESSING STRAND

20-13 ø low relaxation strands, fpu = 1 860 MPa

PILE LOADING

	END PILE BENTS	INTERMEDIATE PILE BENTS
MAXIMUM FACTORED LOAD	597 kN	668 kN
FACTORED BEARING RESISTANCE	[___]	[___]

HYDRAULIC DESIGN DATA

DESIGN DISCHARGE

Q[_____]=[__]m³/sec

SURVEY CONTROL

HORIZONTAL DATUM:	NAD83CSRS
VERTICAL DATUM:	CGVD28
ELLIPSOID:	GRS 1980
GEOID (HT2.0):	_____
UTM:	ZONE ___
SCALE FACTOR:	_._____

SITE CONTROL POINT DATA

CONTROL POINT #_____	NORTHING:	_____.___
	EASTING:	_____.___
	ELEVATION:	___.___
	DATE:	_____
CONTROL POINT #_____	NORTHING:	_____.___
	EASTING:	_____.___
	ELEVATION:	___.___
	DATE:	_____
CONTROL POINT #_____	NORTHING:	_____.___
	EASTING:	_____.___
	ELEVATION:	___.___
	DATE:	_____

SHEET LEGEND

1. COVER SHEET
2. GENERAL ELEVATION
3. BORING LOGS
4. SITE AND EROSION CONTROL DETAILS
5. ASSEMBLY DETAILS
6. ASSEMBLY DETAILS
7. STEEL PILE CAP DETAILS
8. STEEL PILE CAP DETAILS
9. BEARING AND ERECTION DETAILS
10. RAILING LAYOUT AND DETAILS
11. RAILING DETAILS
12. RAILPOST DETAILS

P1. PRECAST PANEL DETAILS
P2. PRECAST PANEL DETAILS

G1. PRECAST PRESTRESSED CHANNEL GIRDER DETAILS
G2. PRECAST PRESTRESSED CHANNEL GIRDER DETAILS
G3. PRECAST PRESTRESSED CHANNEL GIRDER DETAILS
G4. PRECAST PRESTRESSED CHANNEL GIRDER DETAILS
G5. PRECAST PRESTRESSED CHANNEL GIRDER DETAILS

N

TP. -

PLACE LOCATION MAP HERE

RGE. -

LOCATION MAP

Not to Scale

ENVIRONMENTAL APPROVALS

☐ MANITOBA ENVIRONMENT ACT LICENCE
DATE : _____
FILE # : _____

☐ FISHERIES AND OCEANS CANADA - AUTHORIZATION OR REVIEW
DATE : _____
FILE # : _____

☐ TRANSPORT CANADA - NAVIGATION ACT
DATE : _____
FILE # : _____

☐ MANITOBA INFRASTRUCTURE ENVIRONMENTAL APPROVAL
DATE : _____
FILE # : _____

☐ ENVIRONMENTAL REVIEW COMPLETED
DATE : _____
COMPLETED BY : _____

MANITOBA INFRASTRUCTURE

WATER MANAGEMENT AND STRUCTURES

RELEASED FOR CONSTRUCTION BY :

_____
EXECUTIVE DIRECTOR OF STRUCTURES

DATE _____

ALL DIMENSIONS ARE IN MILLIMETRES (mm) AND ALL ELEVATIONS AND STATIONS ARE IN METRES (m) UNLESS SHOWN OTHERWISE.

DRAWN BY:	DATE:	SHEET No. 1
CHECKED BY:	DATE:	SITE No.

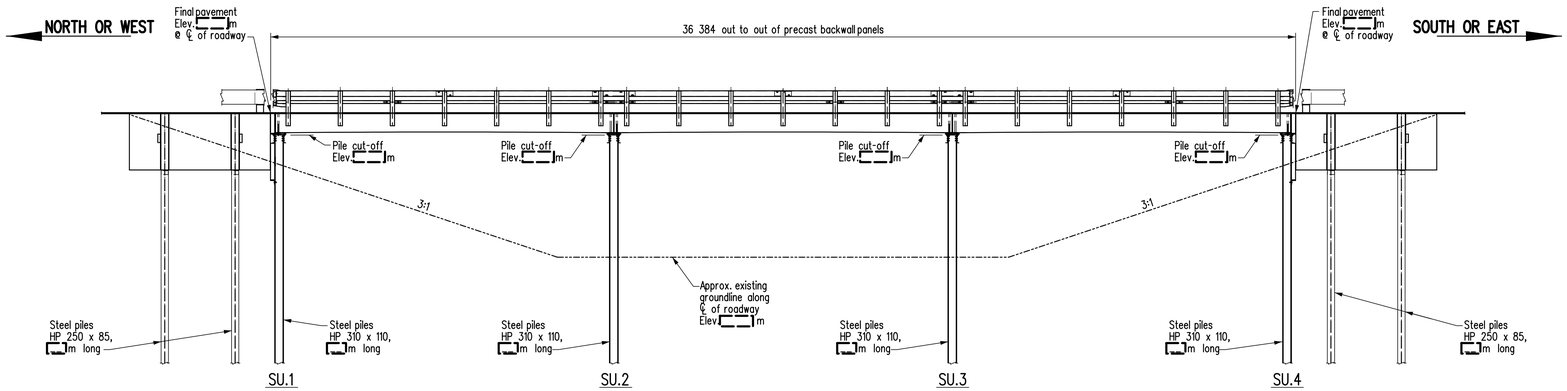

ELEVATION

BILL OF PILES

Site No.

LOCATION	DESCRIPTION	No. OF PILES	LENGTH	TOTAL LENGTH (m)
SU.1 & SU.4	Steel piles - HP310 x 110 (abutments)	14		0
SU.1 & SU.4	Steel piles - HP250 x 85 (w ingw alls)	8		0
				0
SU.2 & SU.3	Steel piles - HP310 x 110 (Intermediate bent)	18		0
				0
			TOTAL LENGTH OF PILES (m) =	0

BILL OF PILE TIPS

LOCATION	DESCRIPTION	No. OF PILES
SU.1 & SU.3	Hard-Bite Point HP-77750-B for HP310 x 110 (Abutments)	14
SU.2 & SU.3	Hard-Bite Point HP-77750-B for HP310 x 110 (Intermediate bent)	18

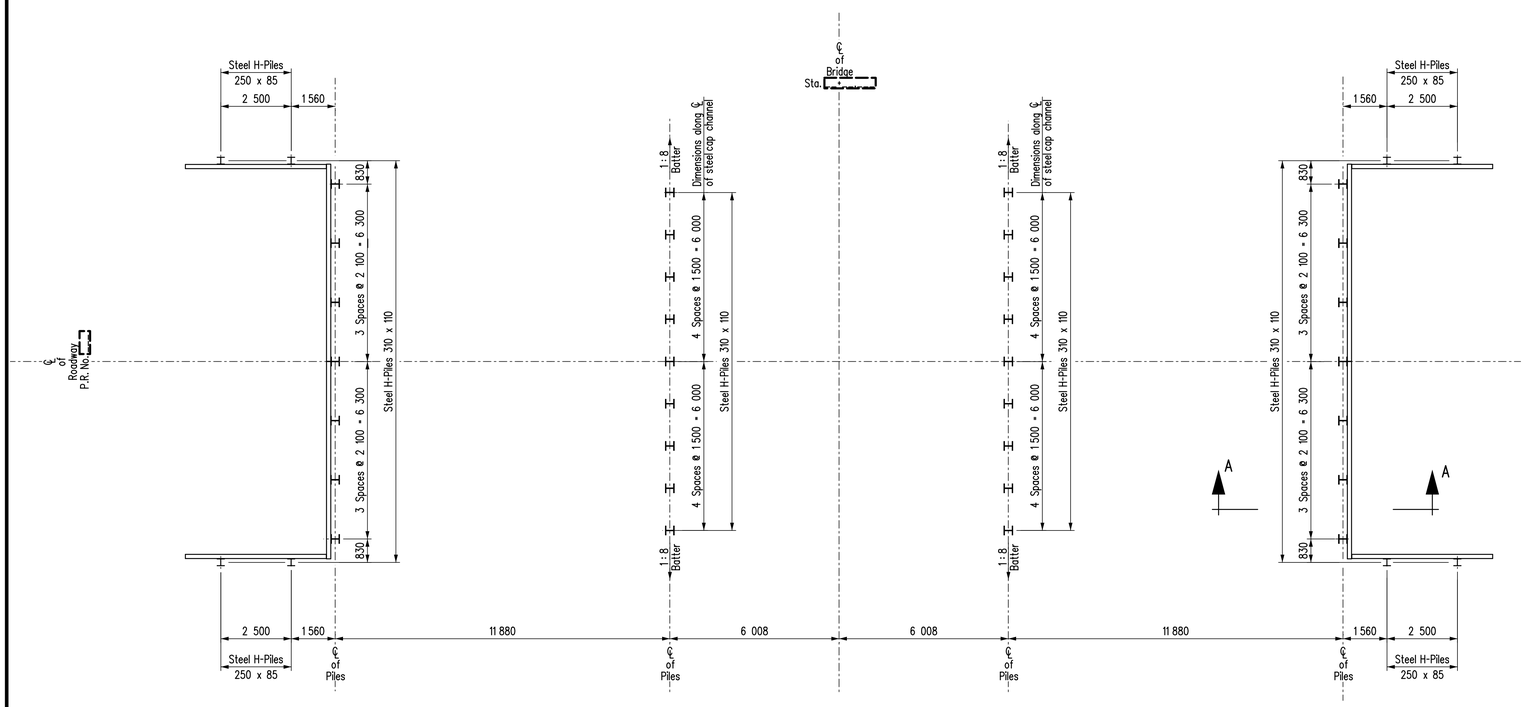

PLAN

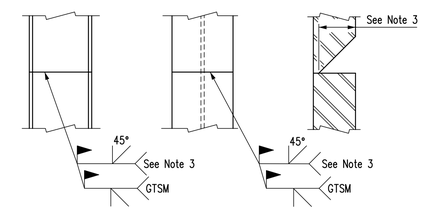

DETAIL OF STEEL HP PILE SPLICE

Not To Scale

NOTES:

re: Welding

1. Low hydrogen *E70 series electrodes shall be used.
2. The minimum root pass shall be 6 mm.
3. Preparation for welding requires 13 mm bevel for HP 250 piles and 14 mm bevel for HP 310 piles.
4. Weld both flanges and web as shown. The inside bevelling and welds to be completed first.
5. Before undertaking the back welds, the weld preparation shall be carried out with a carbon Arc-Air gouger.

*E48018 equivalent metric electrode

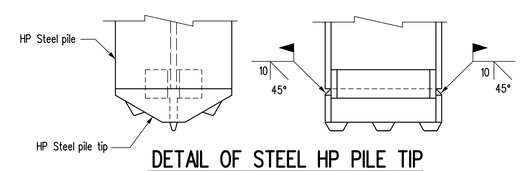

DETAIL OF STEEL HP PILE TIP

Not to Scale

NOTES :

1. Edges of HP Steel pile tip to be ground on 45° bevel for 10 mm.
2. Low hydrogen *E70 series electrodes shall be used.
3. The minimum root pass shall be 6 mm.

*E48018 equivalent metric electrode

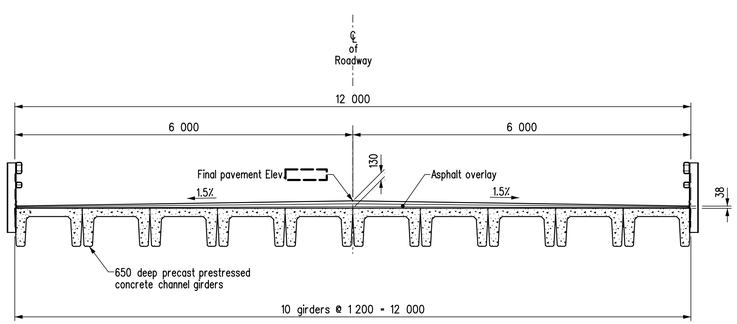

CROSS SECTION

Scale 1:50

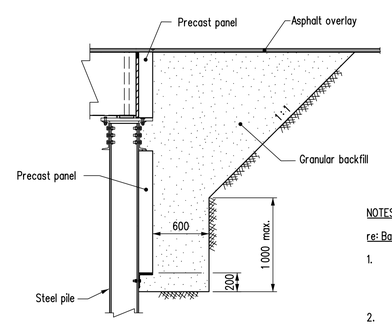

SECTION A-A

Typical at Su.1
Scale 1:30

NOTES :

re: Backfill Behind Abutment Ballast Walls

1. Backfill behind ballast wall and wingwall panels shall be Type 1 - Granular backfill supplied and placed in accordance with Bridge Specification 1001 (I). The granular backfill shall be placed and compacted in lifts not exceeding 150 mm.
2. Compaction equipment used within 2 m of ballast walls and wingwalls shall be limited to light vibratory equipment with a mass not exceeding 120 kg unless otherwise approved.
3. Steel pile tip to be PRUYN "Hard-Bite" or equivalent.

REVISIONS		
DATE	BY	DESCRIPTION

DESIGN SEAL | RECORD SEAL

PLACE ENGINEERS ELECTRONIC SEAL HERE

GENERAL ELEVATION

Manitoba Infrastructure
Water Management and Structures

RELEASED FOR CONSTRUCTION BY:

EXECUTIVE DIRECTOR OF STRUCTURES DATE

DESIGN	BY: B.A.N.	SCALE: 1 : 100	SHEET No. 1
	CHECKED:		
DETAILS	BY: K.P.	or as shown	SITE No. ___
	CHECKED:		

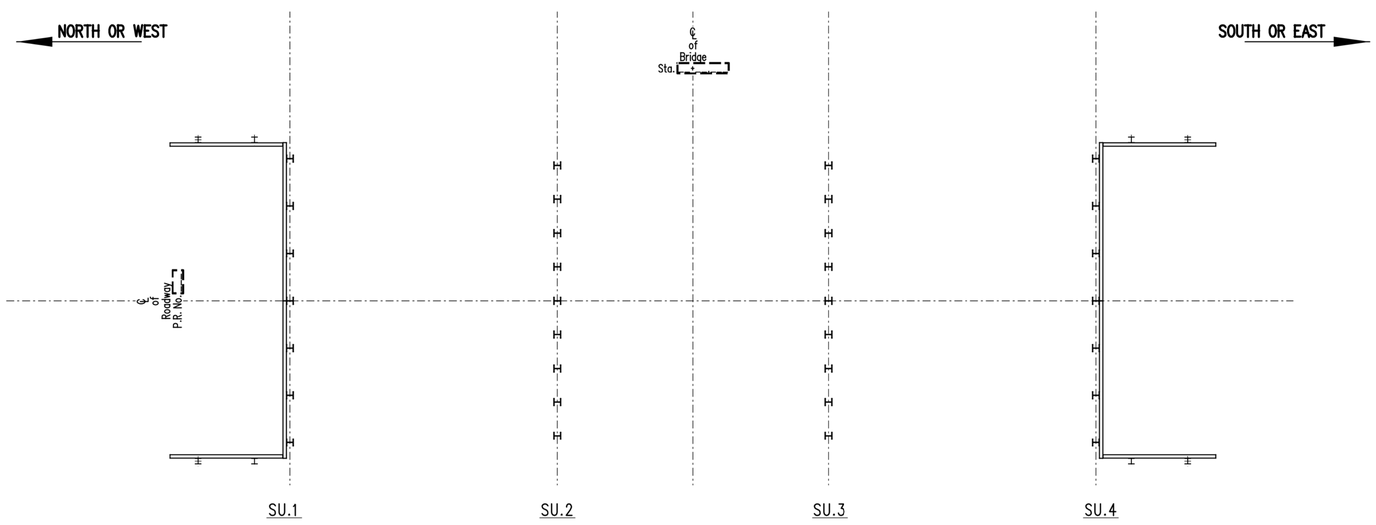

PLAN

Showing Bore Hole locations

NOTES - re: Boring Logs

1. The Department provides log boring information shown on the Plans. This information may not be representative of the soil conditions throughout the site. Contractors may peruse all available soil information in the Water Management and Structures Branch located at 6th floor, 215 Garry Street, Winnipeg.
2. The following abbreviations apply to bore hole information:
   - Qu - Laboratory unconfined compressive strength in kPa
   - SPT (N) - Number of blows per 300 mm - Standard Penetration Test
   - USC - Unified Soil Classification
   - M.C. - Moisture Content
3. All stations, elevations, offsets and depths as shown are in meters. All dimensions are in millimeters.
4. All bore hole locations shown in plan view are approximate.
5. Elevations on boring logs are at a vertical scale of 1:100.

REVISIONS		
DATE	BY	DESCRIPTION

DESIGN SEAL | RECORD SEAL

PLACE ENGINEERS ELECTRONIC SEAL HERE

BORING LOGS

Manitoba
Infrastructure
Water Management and Structures

RELEASED FOR CONSTRUCTION BY:

EXECUTIVE DIRECTOR OF STRUCTURES DATE

DESIGN	BY: B.A.N.	SCALE: 1 : 125
	CHECKED:	SHEET No. 2
DETAILS	BY: K.P.	or as shown
	CHECKED:	SITE No.

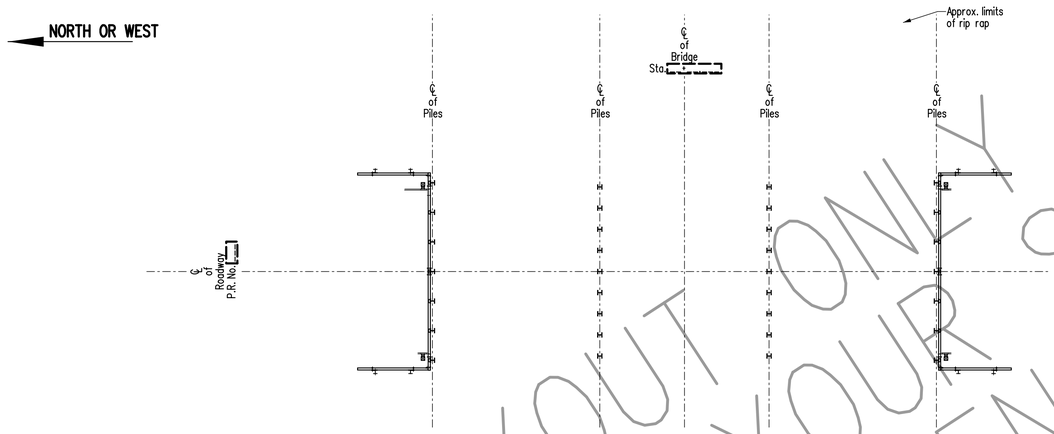

PLAN

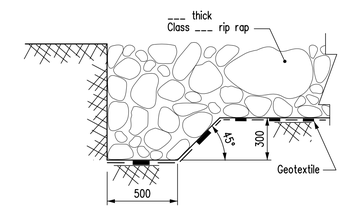

EDGE TREATMENT

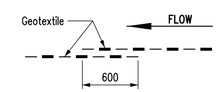

OVERLAPPING DETAILS

RIP RAP DETAILS

Not To Scale

NOTES:

1. All geotextile shall be Non-Woven Geotextile, Class I (Heavy Duty) from the Manitoba Infrastructure's Approved Product List.
2. Geotextile shall be placed under all rip rap, overlapping 600mm in direction of flow.

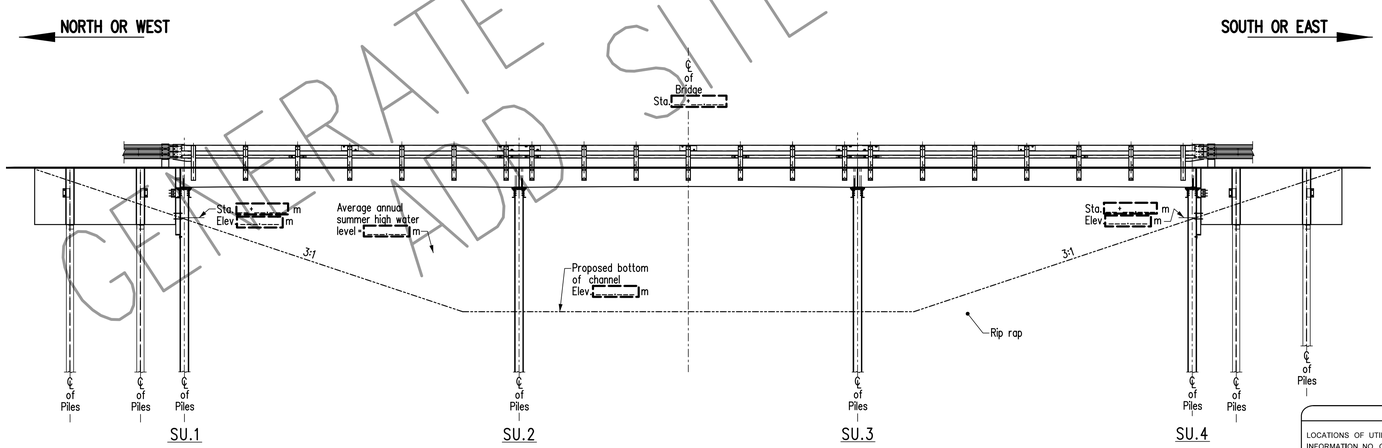

ELEVATION

Scale 1:75

NOTE:

Existing pile bents to be removed by Bridge Contractor.

UTILITY DISCLAIMER:

LOCATIONS OF UTILITIES AS SHOWN ARE BASED ON READILY AVAILABLE INFORMATION. NO GUARANTEE IS GIVEN THAT ALL UTILITIES ARE SHOWN OR THAT THE GIVEN LOCATIONS ARE EXACT. CONTRACTOR SHALL CONFIRM THE EXISTENCE AND LOCATION OF UTILITIES BY OBTAINING FROM THE INDIVIDUAL UTILITIES BEFORE PROCEEDING WITH CONSTRUCTION.

REVISIONS		
DATE	BY	DESCRIPTION

DESIGN SEAL | RECORD SEAL

PLACE ENGINEERS ELECTRONIC SEAL HERE

SITE AND EROSION CONTROL DETAILS

Manitoba
Infrastructure
Water Management and Structures

RELEASED FOR CONSTRUCTION
BY:

EXECUTIVE DIRECTOR OF STRUCTURES DATE

DESIGN	BY:	SCALE: 1:200	SHEET No. 4
	CHECKED:		
DETAILS	BY: K.P.	or as shown	SITE No.
	CHECKED:		

EXAMPLE LAYOUT ONLY
GENERATE SHEET FROM YOUR SITE PLAN
ADD SITE SPECIFIC DIMENSIONS

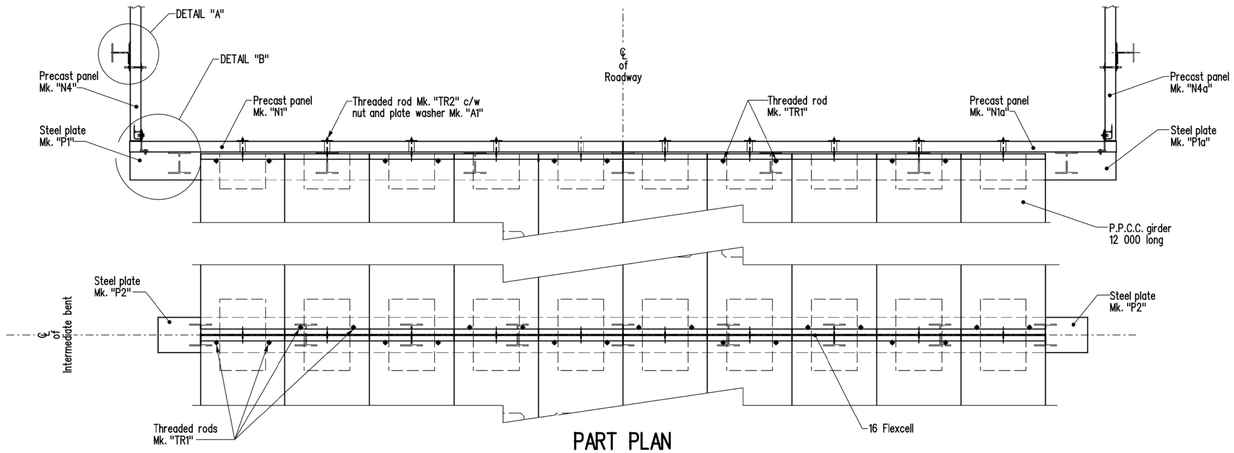

PART PLAN

Showing abutment SU.1 and pile bent SU.2
Asphalt and bridge railing not shown for clarity

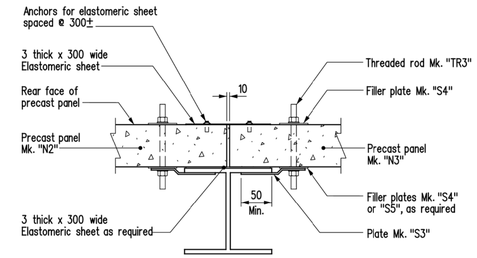

SECTION A-A

Scale 1:10

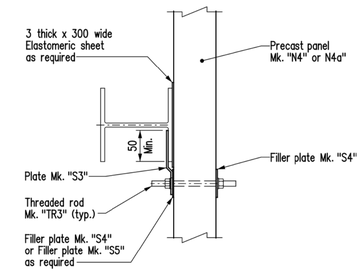

DETAIL "A"

Scale 1:10

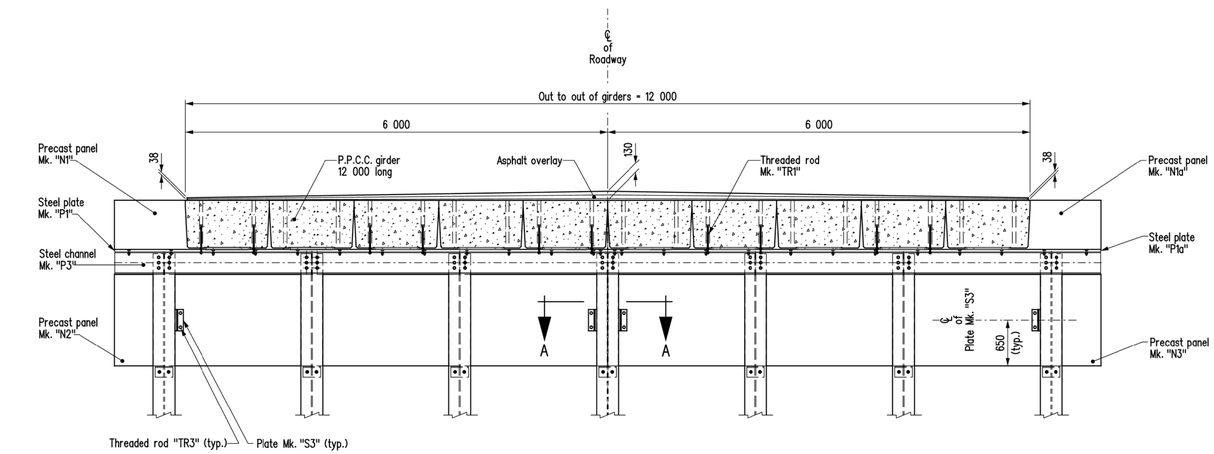

FRONT VIEW AT ABUTMENT

Bridge railing not shown for clarity

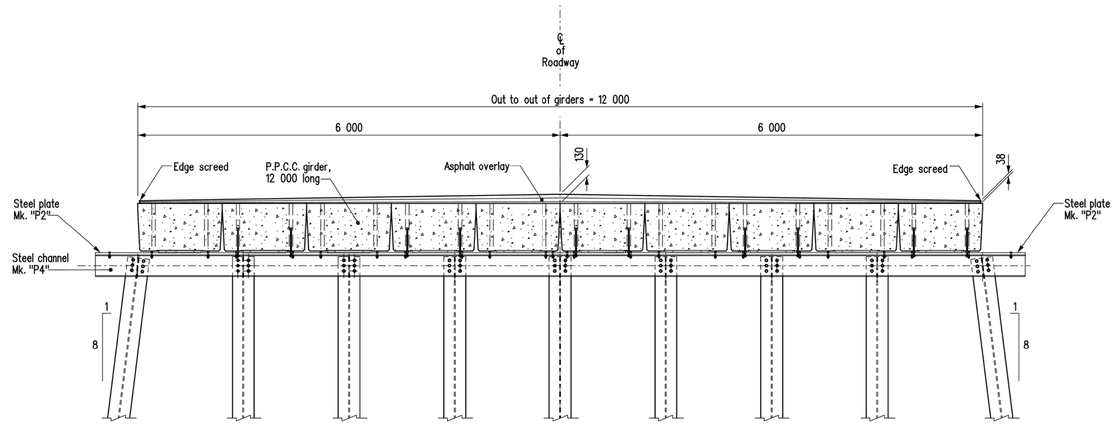

CROSS SECTION AT INTERMEDIATE PILE BENT

Bridge railing and intermediate pile bent cross bracing not shown for clarity

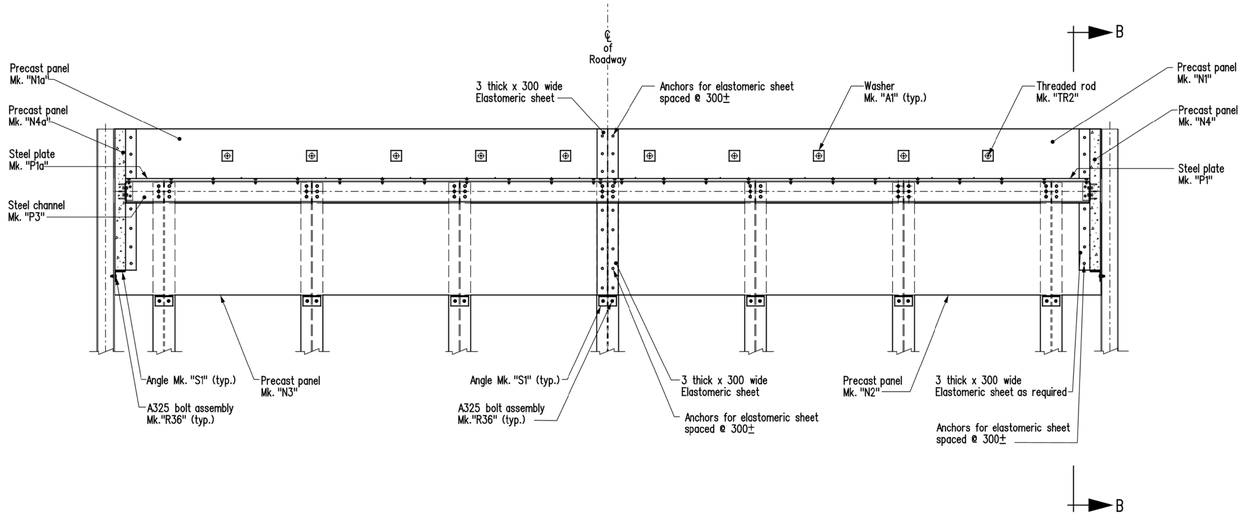

REAR VIEW AT ABUTMENT

Bridge railing not shown for clarity

NOTES:

1. For Section "B-B" and DETAIL "B" see Sheet No. .[ ]
2. For "BILL OF MISCELLANEOUS METAL" see Sheet No. .[ ]
3. The Contractor shall field drill 22 ø holes in the precast panels for threaded rods Mk. "TR3". Should rebar be encountered, abandon hole, patch and drill in new location. Rebar locations are marked on the panels by the Panel Fabricator.
4. Back faces of the upper and lower ballast walls shall be aligned in the same vertical plane.
5. The Contractor shall ensure that the upper ballast walls are placed with the edge 5mm from ℄ of roadway.

REVISIONS		
DATE	BY	DESCRIPTION

DESIGN SEAL | RECORD SEAL

PLACE ENGINEERS ELECTRONIC SEAL HERE

ASSEMBLY DETAILS

Manitoba
Infrastructure
Water Management and Structures

RELEASED FOR CONSTRUCTION
BY:
EXECUTIVE DIRECTOR OF STRUCTURES DATE

DESIGN	BY: B.A.N.	SCALE: 1:40	SHEET No. 6
	CHECKED:		
DETAILS	BY: K.P.	or as shown	SITE No.
	CHECKED:		

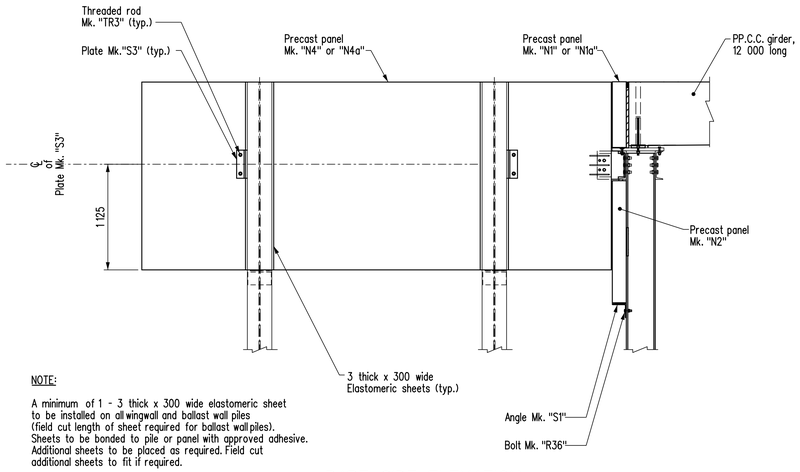

NOTE:

A minimum of 1 - 3 thick x 300 wide elastomeric sheet to be installed on all wingwall and ballast wall piles (field cut length of sheet required for ballast wall piles). Sheets to be bonded to pile or panel with approved adhesive. Additional sheets to be placed as required. Field cut additional sheets to fit if required.

PART SIDE ELEVATION

Bridge railing not shown for clarity

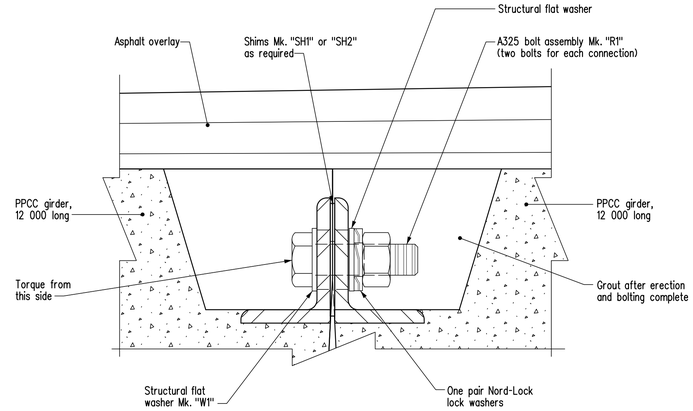

DETAIL OF LATERAL CONNECTION ANGLE

Scale 1:2

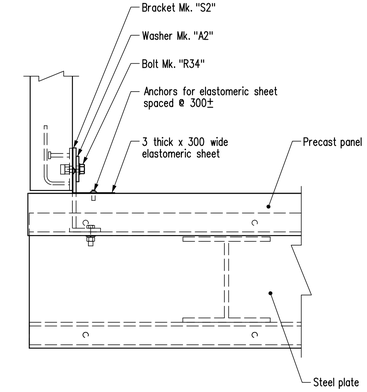

DETAIL "B"

Scale 1:10

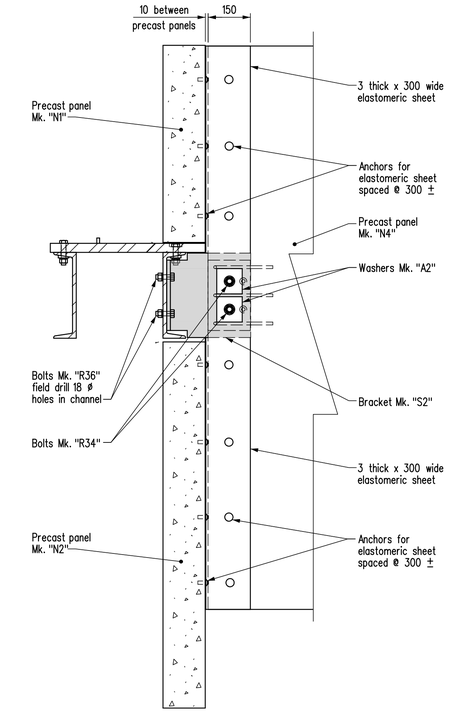

SECTION B-B

Scale 1:10

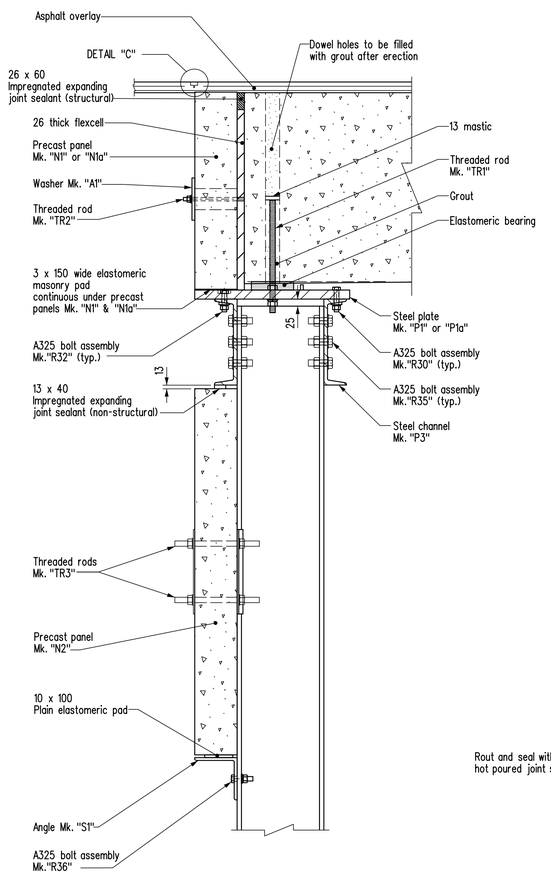

SECTION AT ABUTMENT

Scale 1:10

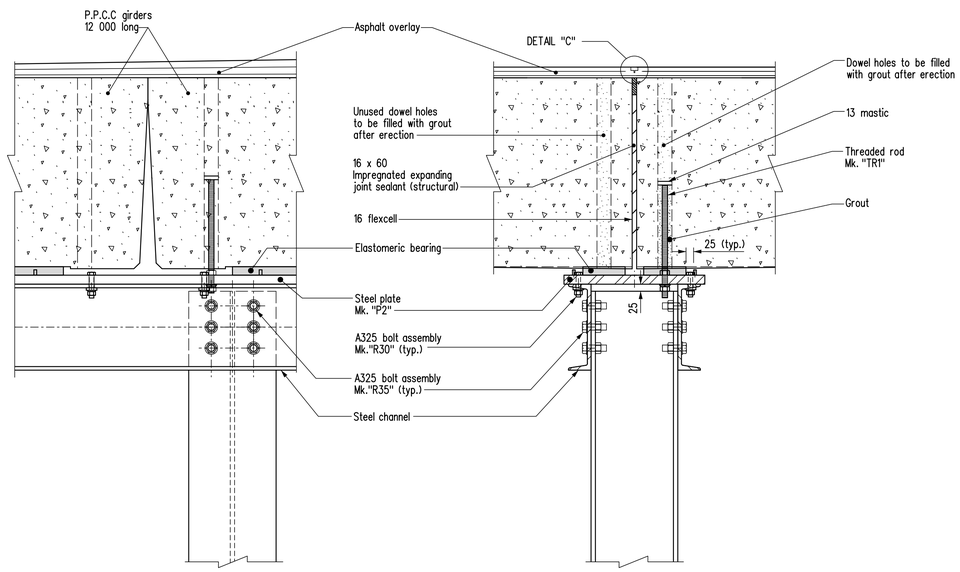

CROSS SECTION

ELEVATION

DETAILS AT INTERMEDIATE BENT

Scale 1:10

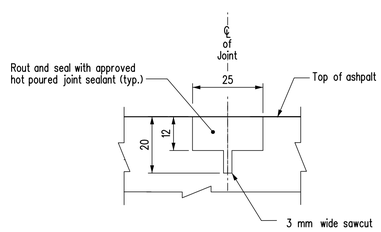

DETAIL "C"

Scale 1:1

NOTES:

1. RE: BOLTING

   a) GIRDER LATERAL CONNECTION
      - Bolts Mk. "R1" - c/w one F436 hardened washer, one structural plate washer Mk."W1", one pair Nord-Lock washers and one Grade DH heavy hex. nut.

   b) STEEL CAP
      - Bolts Mk. "R30" - One F436 hardened washer, one hardened bevel washer and one Grade DH heavy hex. nut.
      - Bolts Mk. "R32" - One hardened bevel washer and one Grade DH heavy
      - Bolts Mk. "R35" - Two F436 hardened washers and one Grade DH heavy hex. nut.

   c) PRECAST PANELS
      - Bolts Mk. "R36" - Two F436 hardened washers and one Grade DH heavy hex. nut.
      - Bolts Mk. "R34" - One F436 hardened washer and one structural plate washer Mk. "A2", no nuts.
      - Threaded rod Mk. "TR2" - One standard flat washer, one structural lock washer, structural plate washer Mk. "A1" and one stainless steel hex. nut.
      - Threaded rod Mk. "TR3" - two Filler plates Mk. "S4", one structural lock washer, two standard flat washers and two hex. nuts, Filler plate Mk. "S5" if required.

   d) GIRDER TO STEEL CAP
      - Threaded rod Mk. "TR1" - one standard flat washer and structural lock washer and two hex. nuts.

   e) High strength bolts shall be tightened by the turn-of-nut method as per Bridge Specifications. Ensure nuts are lubricated prior to bolting.

   f) Fill counter bored holes with mastic filler after tightening bolts.

2. When grouting dowel holes in girders, ensure that there is no grout between bottom of girder and bearing plate.

3. Apply galvalloy to all field welds & areas where galvanizing has been damaged.

4. Impregnated expanding joint sealant shall be installed as per manufacturer's recommendations.

NOTE:

For location of SECTIONS "B-B" & "DETAIL B" see Sheet No. 6.

REVISIONS		
DATE	BY	DESCRIPTION

DESIGN SEAL | RECORD SEAL

PLACE ENGINEERS ELECTRONIC SEAL HERE

ASSEMBLY DETAILS

Manitoba Infrastructure
Water Management and Structures

DESIGN	BY: B.A.N.	
	CHECKED:	
DETAILS	BY: K.P.	
	CHECKED:	

RELEASED FOR CONSTRUCTION
BY:

EXECUTIVE DIRECTOR OF STRUCTURES DATE

SCALE: 1 : 30 or as shown

SHEET No. 7

SITE No.

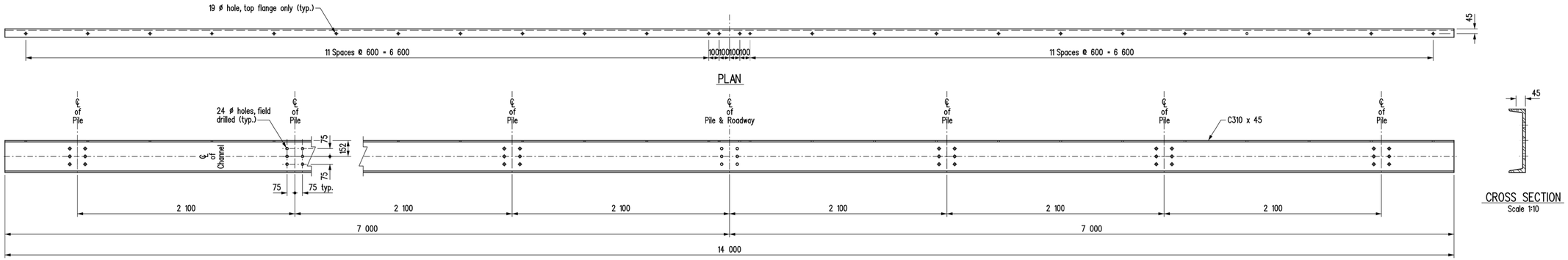

STEEL CHANNEL MK "P3"

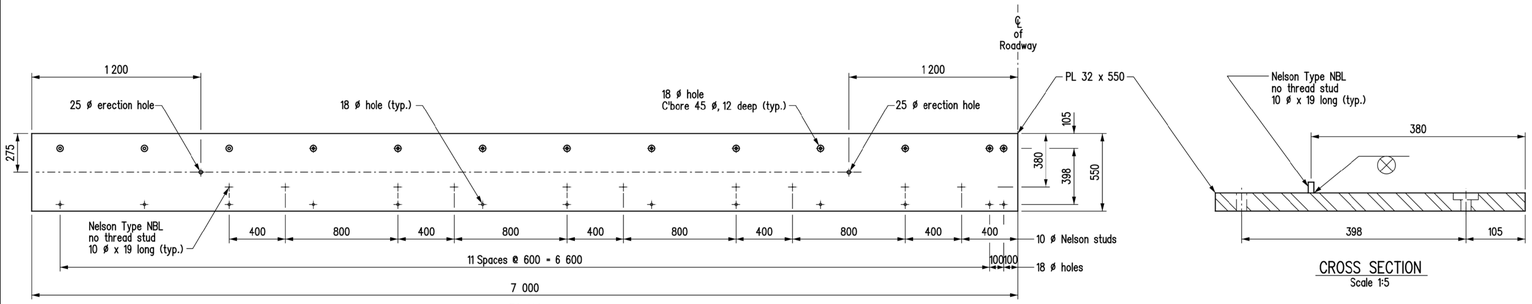

STEEL PLATE MK "P1" & "P1a"

Plate Mk. "P1" as shown, Plate "P1a" opposite hand

FOR ABUTMENTS

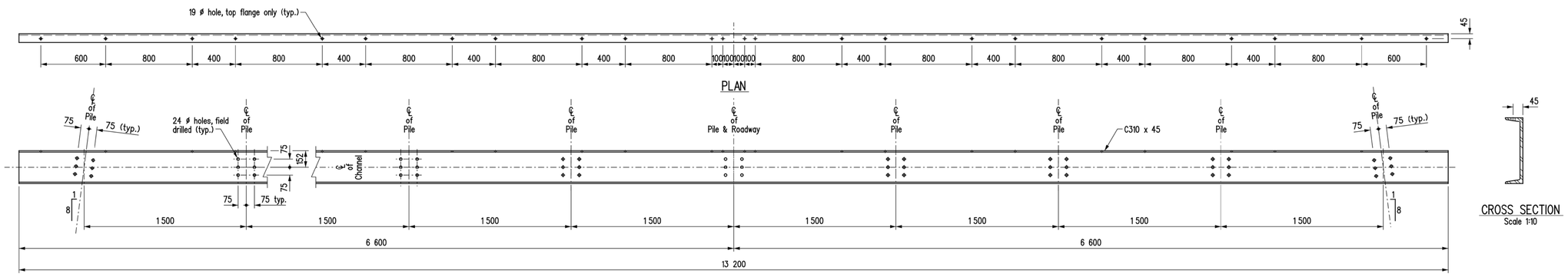

STEEL CHANNEL MK "P4"

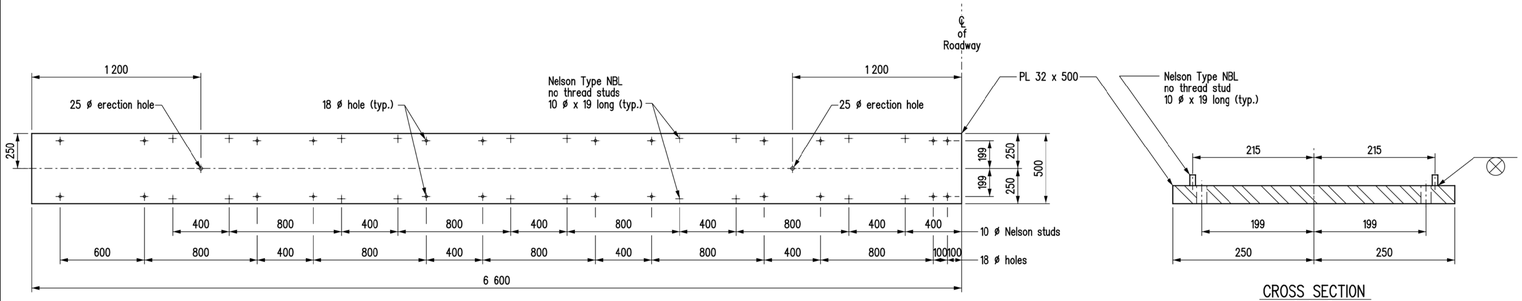

STEEL PLATE MK "P2"

FOR INTERMEDIATE PILE BENTS

REVISIONS		
DATE	BY	DESCRIPTION
DESIGN SEAL		RECORD SEAL

PLACE ENGINEERS ELECTRONIC SEAL HERE

STEEL PILE CAP DETAILS

Manitoba
Infrastructure
Water Management and Structures

RELEASED FOR CONSTRUCTION
BY:

EXECUTIVE DIRECTOR OF STRUCTURES DATE

DESIGN	BY: B.A.N.	SCALE: Scale 1:20	SHEET No. 8
	CHECKED:		
DETAILS	BY: K.P.	or as shown	SITE No.
	CHECKED:		

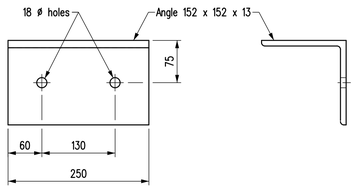

FRONT VIEW END VIEW

ANGLE MK. "S1"

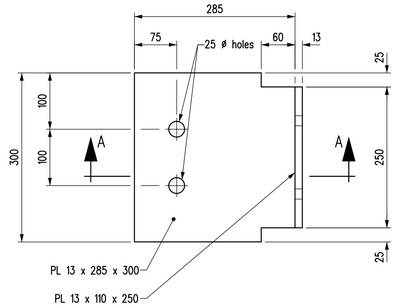

FRONT VIEW

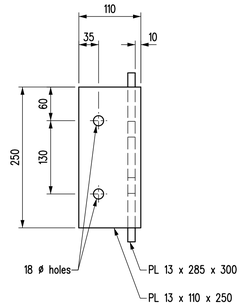

END VIEW

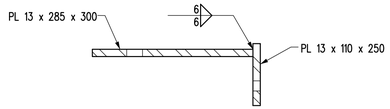

SECTION A-A

BRACKET MK. "S2"

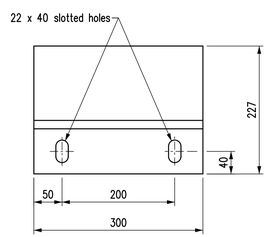

FRONT VIEW

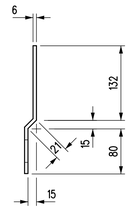

END VIEW

PLATE MK. "S3"

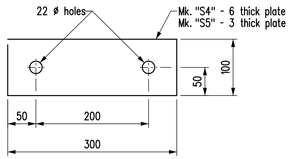

FILLER PLATES MK. "S4" & "S5"

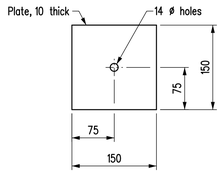

WASHER MK. "A1"

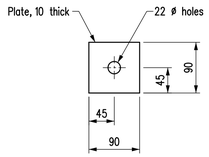

WASHER MK. "A2"

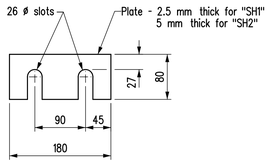

SHIM PLATES MK. "SH1" & "SH2"

BILL OF MISCELLANEOUS METAL — 12 000 ROADWAY WIDTH - 3 SPAN — Site No.

MARK No.	No.	DESCRIPTION	CORROSION PROTECTION	SIZE	LENGTH	REMARKS	COMPONENT MASS	MASS PER UNIT	TOTAL MASS
P1	2	Steel plate	Hot dip galvanized						1934.48
		Each unit to be fabricated from :							
		1 - Steel plate		PL 32x550	7 000	See detail for Abutment	967.120	967.120	
		10 - Nelson Type NBL, no thread studs		10 dia.	19	Part No. 101-063-167	0.012	0.120	
								967.240	
P1a	2	Steel plate	Hot dip galvanized						1934.48
		Each unit to be fabricated from :							
		1 - Steel plate		PL 32x550	7 000	See detail for Abutment	967.120	967.120	
		10 - Nelson Type NBL, no thread studs		10 dia.	19	Part No. 101-063-167	0.012	0.120	
								967.240	
P2	4	Steel plate	Hot dip galvanized						3316.80
		Each unit to be fabricated from :							
		1 - Steel plate		PL 32x500	6 600	See detail for Intermediate Bent	828.960	828.960	
		20 - Nelson Type NBL, no thread studs		10 dia.	19	Part No. 101-063-167	0.012	0.240	
								829.200	
P3	4	Steel channel	Hot dip galvanized	C310x45	14 000	See detail for Abutment		625.800	2503.20
P4	4	Steel channel	Hot dip galvanized	C310x45	13 200	See detail for Intermediate Bent		590.040	2360.16
R30	148	A325 bolt assembly	Hot dip galvanized	16 dia.	89	Steel plate to channels		0.245	36.26
R32	52	A325 bolt assembly	Hot dip galvanized	16 dia.	76	Steel plate to channels Cbore holes		0.225	11.70
R35	384	A325 bolt assembly	Hot dip galvanized	22 dia.	64	Channels to piles		0.461	177.02
R36	52	A325 bolt assembly	Hot dip galvanized	16 dia.	64	Angles Mk. "S1" to piles & bracket Mk. "S2" to cap		0.205	10.66
S1	22	Angle	Hot dip galvanized	L 152x152x13	250	As detailed		7.250	159.50
S2	4	Bracket	Hot dip galvanized			As detailed		11.226	44.90
S3	16	Plate	Hot dip galvanized	PL 6x300		As detailed		3.223	51.57
S4	32	Filler plate	Hot dip galvanized	PL 6x100		As detailed		1.413	45.22
S5	16	Filler plate	Hot dip galvanized	PL 3x100		As detailed		0.707	11.31
A1	16	Structural plate w asher	Hot dip galvanized	PL 10x150	150	As detailed - One to threaded rod Mk. "TR2"		1.766	28.26
A2	8	Structural plate w asher	Hot dip galvanized	PL 10x90	90	As detailed - One to bolt Mk. "R34"		0.636	5.09
TR1	60	Threaded rods c/w tw o hex. nuts	Hot dip galvanized	19 dia.	0	Girder to steel cap plate		0.940	56.40
TR3	32	Threaded rods c/w tw o hex. nuts	Hot dip galvanized	19 dia.	0	Steel plates Mk. "S3" to precast panels		0.660	21.12
	200	Hardened bevel w asher	Hot dip galvanized	for 16 dia. bolts		One to bolts Mk. "R30" & "R32"		0.110	22.00
	20	Standard flat w asher	Hot dip galvanized	for 13 dia. rod		One to threaded rod Mk. "TR2"		0.010	0.20
	124	Standard flat w asher	Hot dip galvanized	for 19 dia. rod		One to "TR1", tw o to "TR3"		0.020	2.48
	20	Structural lock w asher	Hot dip galvanized	for 12 dia. rod		One to threaded rod Mk. "TR2"		0.010	0.20
	92	Structural lock w asher	Hot dip galvanized	for 19 dia. rod		One to "TR1" & "TR3"		0.020	1.84
	384	F436 Hardened w asher	Hot dip galvanized	for 22 dia. bolts		One to bolt Mk. "R35"		0.032	12.29
	52	F436 Hardened w asher	Hot dip galvanized	for 16 dia. bolts		One to bolt Mk. "R36"		0.014	0.73
R1	216	A325 bolt assembly	Hot dip galvanized	22 dia.	76	R.C. girder connection		0.499	107.78
W1	216	Structural flat w asher	Hot dip galvanized	for 22 dia. bolts		One to bolt Mk. "R1"		0.050	10.80
	216	Pair Nord-Lock lock w ashers		for 22 dia. bolts		One pair to bolt Mk. "R1"		0.020	4.32
SH1	108	Shim plate	Hot dip galvanized	PL 2.5x80	180	As detailed - use as required		0.231	24.95
SH2	108	Shim plate	Hot dip galvanized	PL 5x80	180	As detailed - use as required		0.463	50.00
								TOTAL MASS (kg) =	12945.72

NOTES:

1. All material noted in the above Bill shall be hot dip galvanized after fabrication in accordance w ith CSA G164 for a minimum net retention of 610 g/m2 unless otherw ise stated in the specified material ASTM standards. The fabricator and galvanizer shall safeguard against embrittlement using recommended practices from applicable standards.
2. Seal all w elds prior to galvanizing.
3. Apply Galvaloy to all field w elds and areas w here galvanizing has been damaged.
4. All bolts and threaded rod in the above Bill shall be Imperial thread.

REVISIONS

DATE	BY	DESCRIPTION

DESIGN SEAL | RECORD SEAL

PLACE ENGINEERS ELECTRONIC SEAL HERE

STEEL PILE CAP DETAILS

Manitoba Infrastructure
Water Management and Structures

RELEASED FOR CONSTRUCTION BY:

EXECUTIVE DIRECTOR OF STRUCTURES DATE

DESIGN	BY: B.A.N.	SCALE: 1:5 or as shown
	CHECKED:	SHEET No. 9
DETAILS	BY: K.P.	
	CHECKED:	SITE No.

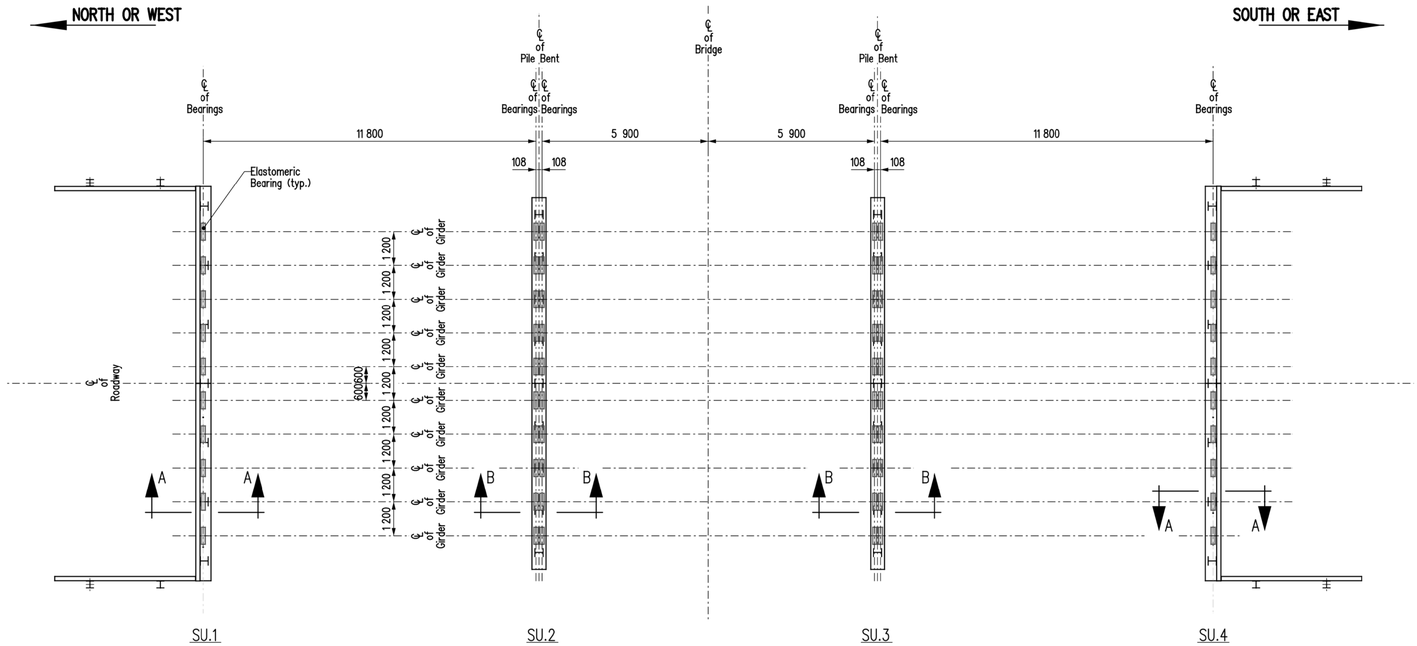

PLAN

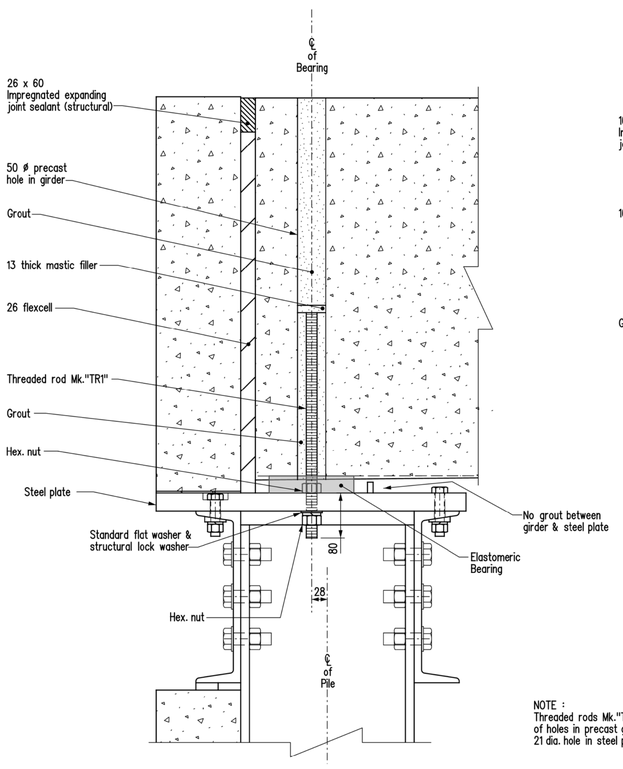

SECTION "A-A"

Threaded rods at SU.1 & SU.4. See sheet No. 6 for layout.
Scale 1:5

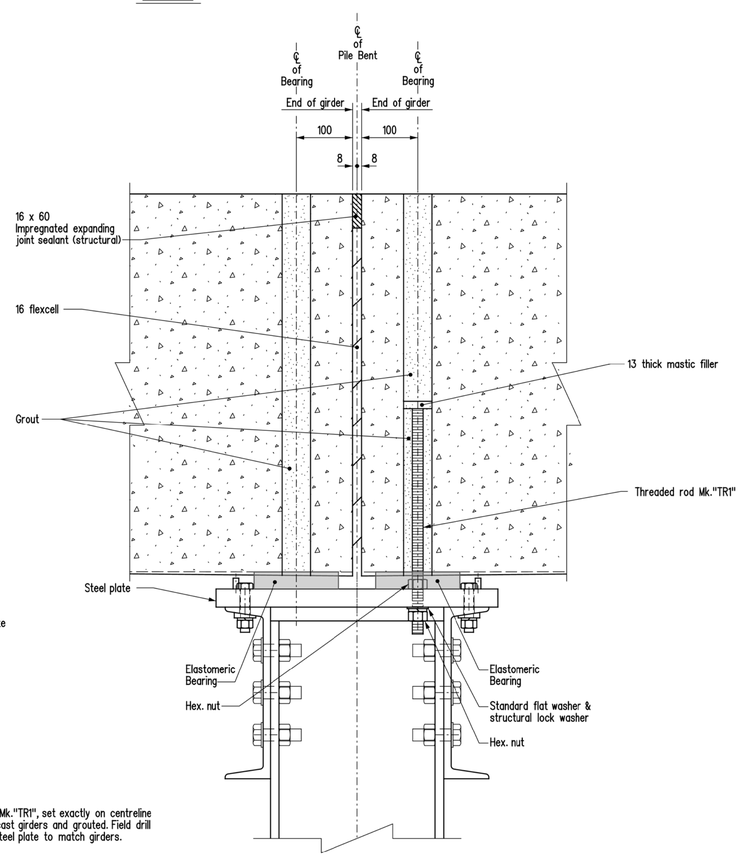

NOTE :
Threaded rods Mk."TR1", set exactly on centreline of holes in precast girders and grouted. Field drill 21 dia. hole in steel plate to match girders.

SECTION "B-B"

Threaded rods at SU.2 & SU.3. See Sheet No. 6 for layout.
Scale 1:5

BILL OF BEARINGS

12 000 ROADWAY WIDTH - 3 SPAN

Site No.

No.	LOCATION	DESCRIPTION	REMARKS
60	SU.1 - SU.4	Elastomeric bearings	As detailed

NOTE:

1. Elastomer shall be natural rubber. Elastomer shall be AASHTO low temperature Grade 5 with a minimum shear modulus G ≥ 0.9 MPa and a 60 durometer Shore A hardness.
2. Internal steel reinforcing plates for laminate bearings shall be rolled mild steel with a minimum yield strength of 300 Mpa.

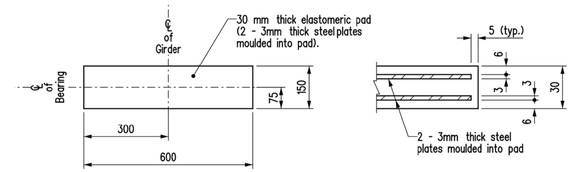

PLAN
Scale 1:10

PART CROSS SECTION
Scale 1:2

ELASTOMERIC BEARINGS

NOTES:

Re: Girder Erection Operations Behind Abutment Ballast Walls

1. Surcharge loading on the backfill resulting from girder erection operations shall be minimized near the precast concrete ballast walls and wingwalls.
2. Where possible, girder erection equipment shall be positioned such that there are no surcharge loads behind the back face of the precast panels within a distance equal to the depth of backfill to the bottom of the panels at the time of girder erection.
3. Should the Contractor propose to encroach on this zone, the following requirements must be satisfied:
   - Submit a girder erection procedure for approval outlining type, configuration, weights and locations of equipment including expected tipping forces on crane outriggers, etc.
   - Perform all precautionary measures outlined by the Department as a result of that submission.
   - All surcharge loads encroaching in this zone must be distributed over an area not less than 2.0 m².

REVISIONS		
DATE	BY	DESCRIPTION

DESIGN SEAL | RECORD SEAL

PLACE ENGINEERS ELECTRONIC SEAL HERE

BEARING AND ERECTION DETAILS

Manitoba
Infrastructure
Water Management and Structures

RELEASED FOR CONSTRUCTION
BY:

EXECUTIVE DIRECTOR OF STRUCTURES DATE

DESIGN	BY: B.A.N.	SCALE: 1 : 100
	CHECKED:	SHEET No. 10
DETAILS	BY: K.P.	or as shown
	CHECKED:	SITE No.

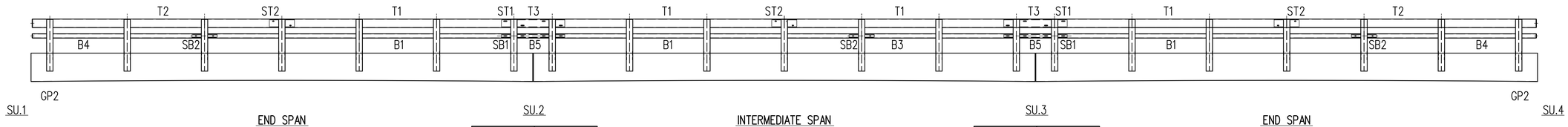

END SPAN

RAILS				SLEEVES		RAILPOSTS	
T1	T2	B1	B4	ST2	SB2	GP1	GP2
2	2	2	2	2	2	12	2

SU.2

RAILS		SLEEVES	
T3	B5	ST1	SB1
2	2	2	2

INTERMEDIATE SPAN

RAILS			SLEEVES		RAILPOSTS
T1	B1	B3	ST2	SB2	GP1
4	2	2	2	2	14

SU.3

RAILS		SLEEVES	
T3	B5	ST1	SB1
2	2	2	2

END SPAN

RAILS				SLEEVES		RAILPOSTS	
T1	T2	B1	B4	ST2	SB2	GP1	GP2
2	2	2	2	2	2	12	2

RAILING LAYOUT

Not to Scale

NOTES:

1. All railposts shall be Mk. "GP1" unless noted otherwise.
2. This sheet to be read in conjunction with Sheets & .

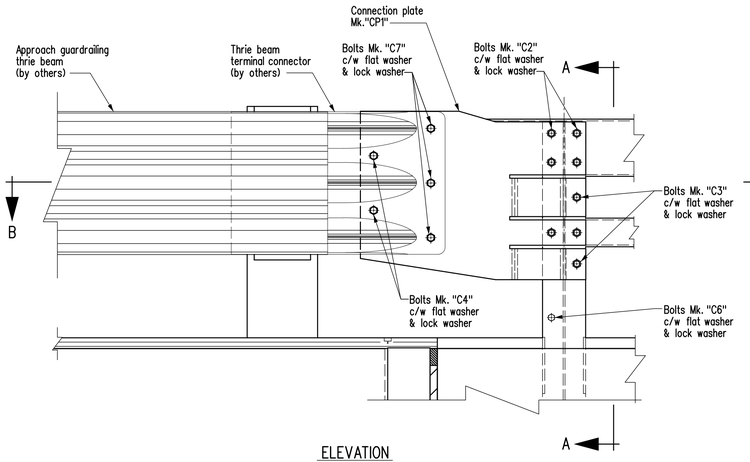

ELEVATION

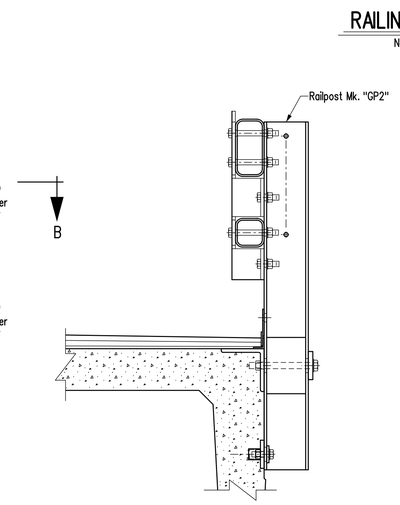

SECTION A-A

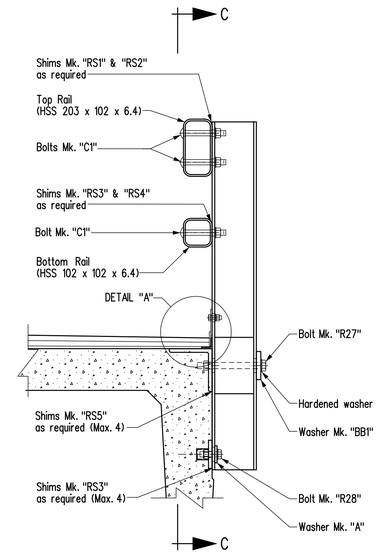

TYPICAL SECTION

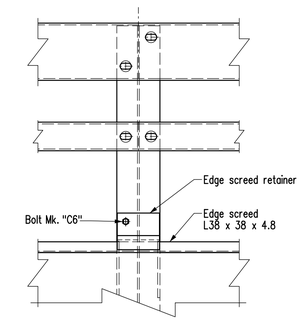

ELEVATION C-C

Showing edge screed installation detail

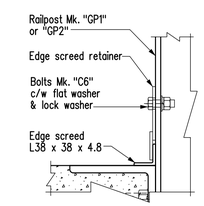

DETAIL "A"

Showing edge screed installation detail
Scale 1:5

RAILPOST ERECTION DETAILS

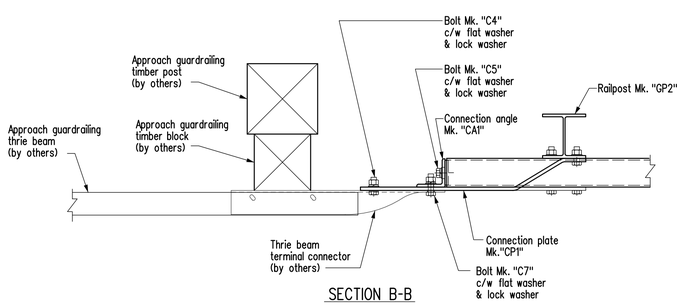

SECTION B-B

APPROACH RAIL CONNECTION DETAILS

NOTES:

1. High strength bolts Mk. "R27" & "R28" shall be tightened by turn-of-nut method as per Specification 1061. These bolts to be supplied by the Girder Fabricator. For quantities see Bill of Miscellaneous Metal on Girder sheet.
2. High strength bolted connection may be shimmed to a maximum of 12 mm with shims Mk. "RS3" & "RS4".

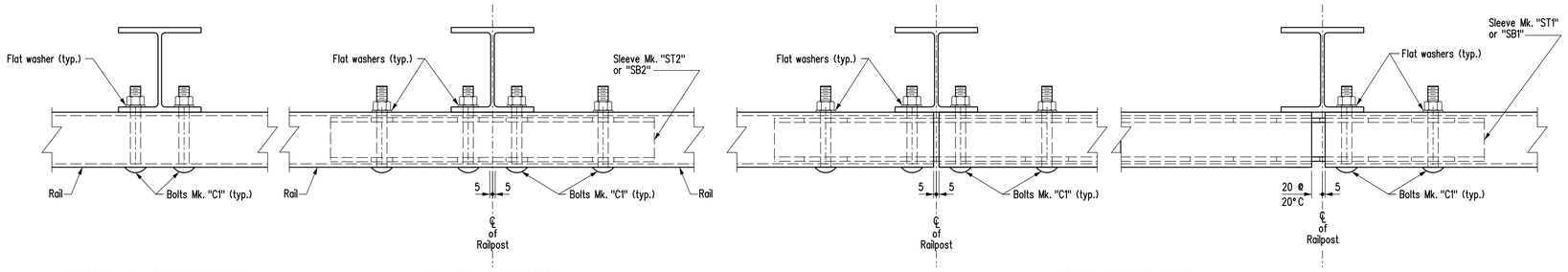

TYPICAL OF CONTINOUS RAILS

RAIL END CONNECTION

TYPICAL AT PILE BENT

RAILING ERECTION DETAILS

Scale 1:5

REVISIONS		

DATE	BY	DESCRIPTION

DESIGN SEAL | RECORD SEAL

RAILING LAYOUT AND DETAILS

Manitoba
Infrastructure
Water Management and Structures

RELEASED FOR CONSTRUCTION
BY:

EXECUTIVE DIRECTOR OF STRUCTURES DATE

DESIGN — BY: — CHECKED:

DETAILS — BY: — CHECKED:

SCALE: 1 : 10 — or as shown

SHEET No.

SITE No.

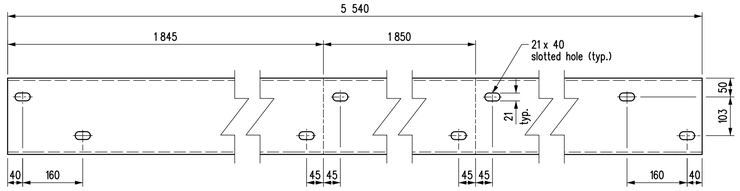

Mk. "T1"

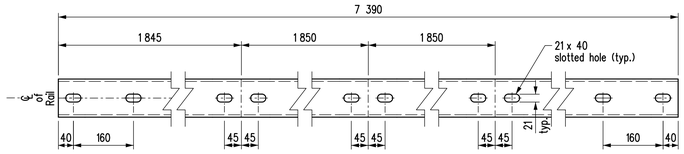

Mk. "B1"

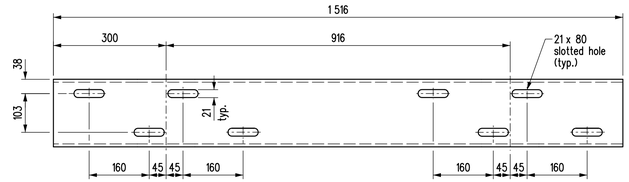

Mk. "ST1"

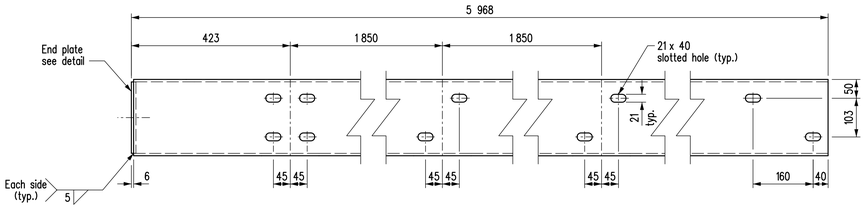

Mk. "T2"

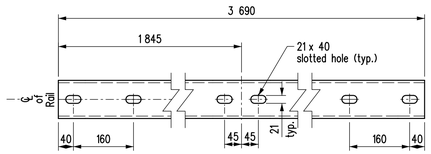

Mk. "B3"

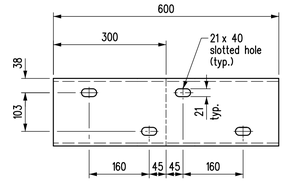

Mk. "ST2"

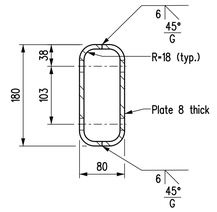

TYPICAL CROSS SECTION
Scale 1:5

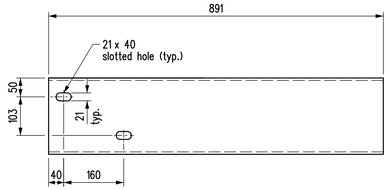

Mk. "T3"

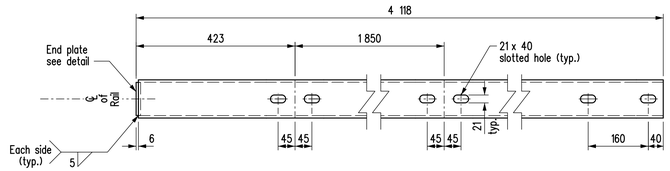

Mk. "B4"

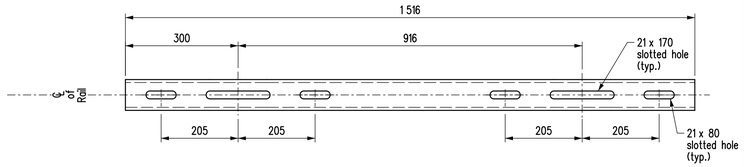

Mk. "SB1"

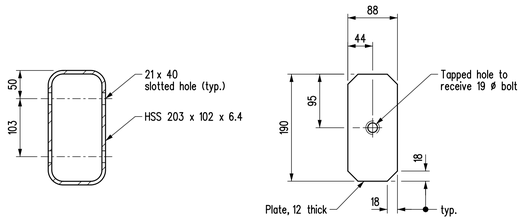

TYPICAL CROSS SECTION
Typical for rail Mk. "T1", "T2" & "T3"
Scale 1:5

END PLATE
For rail Mk. "T2"
Scale 1:5

DETAILS OF TOP RAILS

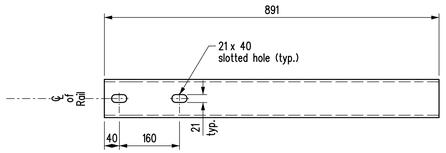

Mk. "B5"

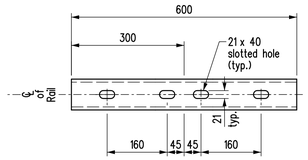

Mk. "SB2"

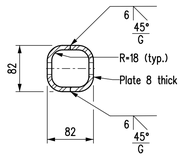

TYPICAL CROSS SECTION
Scale 1:5

DETAILS OF SLEEVES

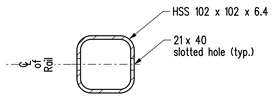

TYPICAL CROSS SECTION
Typical for rails Mk. "B1", "B4" & "B5"
Scale 1:5

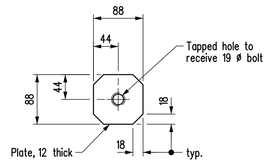

END PLATE
For rail Mk. "B4"
Scale 1:5

DETAILS OF BOTTOM RAILS

NOTES:

1. It is imperative that all rail and sleeve holes in each pair of holes be opposite to each other.
2. The length of slotted holes shall not be less than shown.
3. The width and height of the sleeves shall not exceed the dimensions shown.
4. All dimensions are in millimeters (mm).

REVISIONS		
DATE	BY	DESCRIPTION

DESIGN SEAL	RECORD SEAL

RAILING DETAILS

Manitoba
Infrastructure
Water Management and Structures

RELEASED FOR CONSTRUCTION
BY:

EXECUTIVE DIRECTOR OF STRUCTURES DATE

DESIGN	BY:	SCALE: 1:7.5 or as shown	SHEET No.
	CHECKED:		
DETAILS	BY:		SITE No.
	CHECKED:		

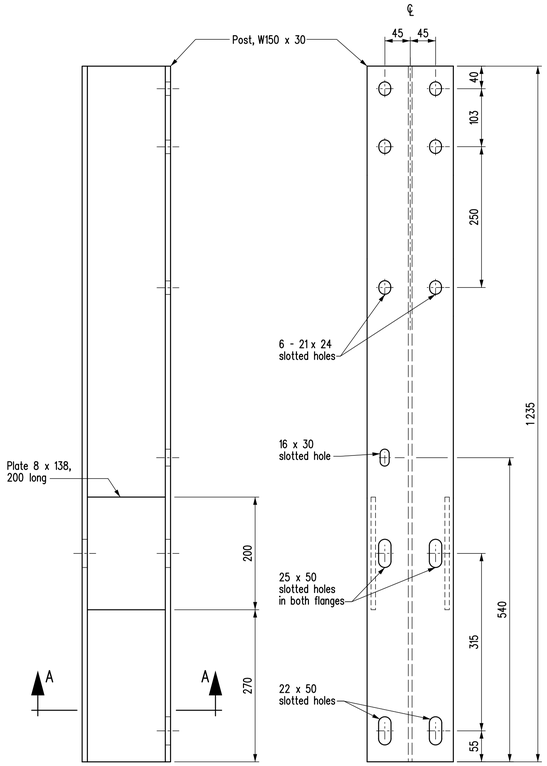

RAILPOST MK. "GP1"

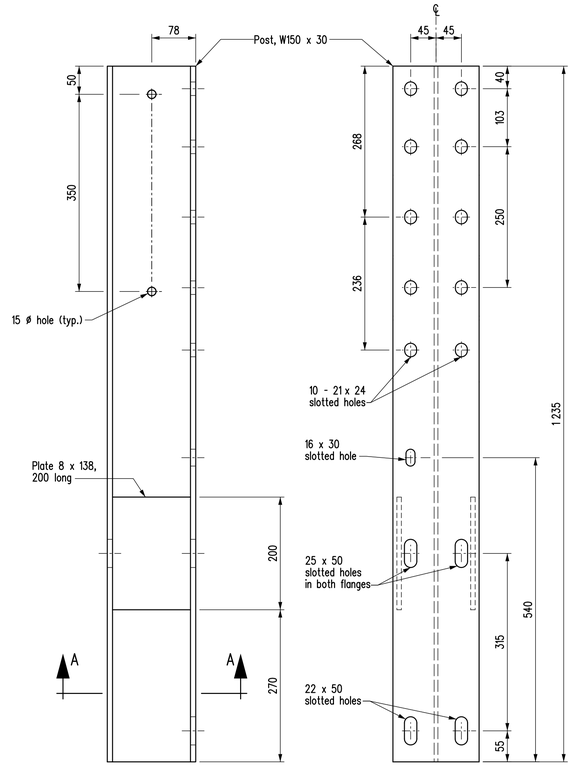

RAILPOST MK. "GP2"

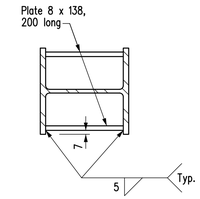

SECTION A-A

Typical for railposts Mk. "GP1" & "GP2"

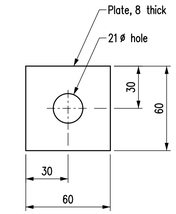

WASHER MK. "A"

Scale 1:2

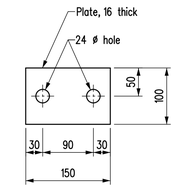

WASHER MK. "BB1"

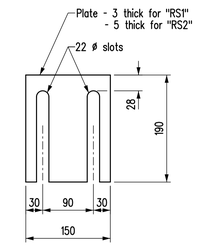

SHIMS MK. "RS1" & "RS2"

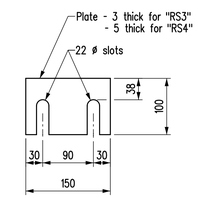

SHIMS MK. "RS3" & "RS4"

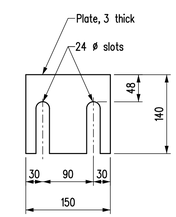

SHIM MK. "RS5"

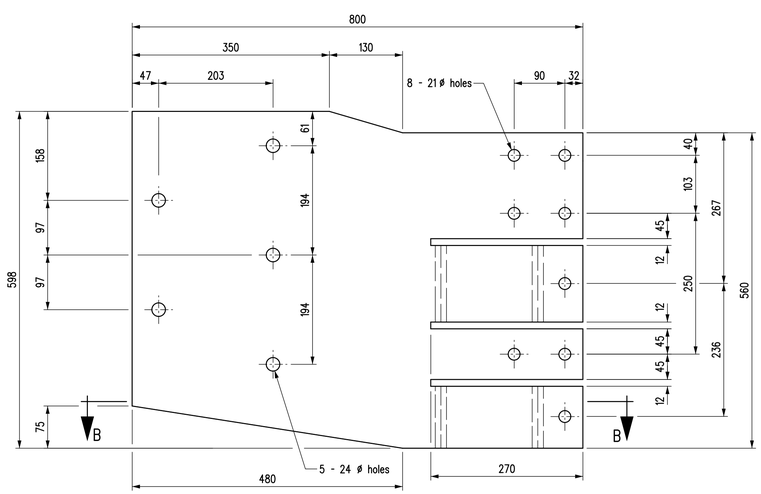

ELEVATION

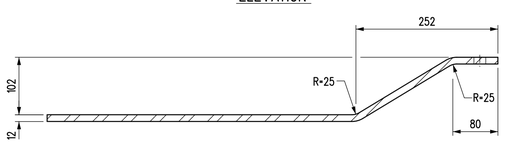

SECTION B-B

CONNECTION PLATES MK. "CP1" & "CP2"

NOTE: Mk. "CP1" shown, Mk. "CP2" opposite hand.

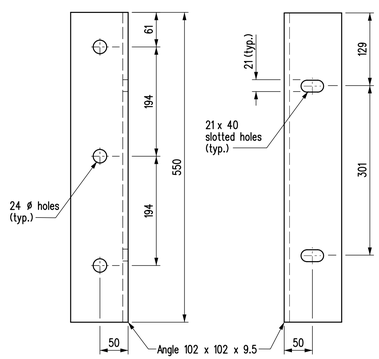

CONNECTION ANGLES MK. "CA1" & "CA2"

NOTE: Mk. "CA1" shown, Mk. "CA2" opposite hand.

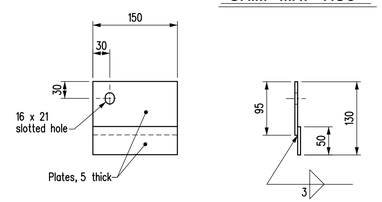

EDGE SCREED RETAINER

BILL OF MISCELLANEOUS METAL — for BRIDGE RAIL - 3 SPAN — Site No.

MARK No.	No.	DESCRIPTION	CORROSION PROTECTION	SIZE	LENGTH	REMARKS	COMPONENT MASS	MASS PER UNIT	TOTAL MASS
GP1	38	Railpost	Hot dip galvanized						1510.39
		Each unit to be fabricated from :							
		1 - Post		W150 x 30	1 235	As detailed	36.281	36.281	
		2 - Plates		PL8 x 138	200	As detailed	1.733	3.466	
								39.747	
GP2	4	Railpost	Hot dip galvanized						158.51
		Each unit to be fabricated from :							
		1 - Post		W150 x 30	1 235	As detailed	36.161	36.161	
		2 - Plates		PL8 x 138	200	As detailed	1.733	3.466	
								39.627	
T1	8	Top rail	Hot dip galvanized						1249.50
		Each unit to be fabricated from :							
		1 - Hollow structural section		HSS203x102x6.4	5 540	As detailed		156.188	
T2	4	Top rail	Hot dip galvanized						677.98
		Each unit to be fabricated from :							
		1 - Hollow structural section		HSS203x102x6.4	5 962	As detailed	167.982	167.982	
		1 - Plate		PL12 x 88	190	As detailed	1.514	1.514	
								169.496	
T3	4	Top rail	Hot dip galvanized						100.26
		Each unit to be fabricated from :							
		1 - Hollow structural section		HSS203x102x6.4	891	As detailed		25.066	
B1	6	Bottom rail	Hot dip galvanized						802.53
		Each unit to be fabricated from :							
		1 - Hollow structural section		HSS102x102x6.4	7 390	As detailed		133.755	
B3	2	Bottom rail	Hot dip galvanized						133.42
		Each unit to be fabricated from :							
		1 - Hollow structural section		HSS102x102x6.4	3 690	As detailed		66.712	
B4	4	Bottom rail	Hot dip galvanized						300.24
		Each unit to be fabricated from :							
		1 - Hollow structural section		HSS102x102x6.4	4 112	As detailed		74.392	
		1 - Plate		PL12 x 88	88	As detailed		0.668	
								75.060	
B5	4	Bottom rail	Hot dip galvanized						64.27
		Each unit to be fabricated from :							
		1 - Hollow structural section		HSS102x102x6.4	891	As detailed		16.067	
ST1	4	Sleeve	Hot dip galvanized						165.99
		Each unit to be fabricated from :							
		2 - Plates			1 516	As detailed	20.749	41.498	
ST2	6	Sleeve	Hot dip galvanized						99.16
		Each unit to be fabricated from :							
		2 - Plates			600	As detailed	8.263	16.526	
SB1	4	Sleeve	Hot dip galvanized						90.98
		Each unit to be fabricated from :							
		2 - Plates			1 516	As detailed	11.372	22.744	
SB2	6	Sleeve	Hot dip galvanized						55.75
		Each unit to be fabricated from :							
		2 - Plates			600	As detailed	4.646	9.292	
CP1	2	Connection plate	Hot dip galvanized			As detailed		41.605	83.21
CP2	2	Connection plate	Hot dip galvanized			As detailed		41.605	83.21
CA1	2	Connection angle	Hot dip galvanized	L102x102x9.5	550	As detailed		7.864	15.73
CA2	2	Connection angle	Hot dip galvanized	L102x102x9.5	550	As detailed		7.864	15.73
A	84	Washer	Hot dip galvanized	PL8x60	60	As detailed		0.226	18.98
BB1	42	Washer	Hot dip galvanized	PL16x100	150	As detailed		1.884	79.13
C1	192	Bolts c/w hex. nuts	Hot dip galvanized	19 dia.	150	Round head, square neck bolt c/w 1 hex. nut		0.424	81.41
C2	24	Bolts c/w hex. nuts	Hot dip galvanized	19 dia.	165	Hex. bolt c/w 1 hex. nut		0.466	11.18
C3	8	Bolts c/w hex. nuts	Hot dip galvanized	19 dia.	65	Hex. bolt c/w 1 hex. nut		0.249	1.99
C4	8	Bolts c/w hex. nuts	Hot dip galvanized	22 dia.	50	Hex. bolt c/w 1 hex. nut		0.327	2.62
C5	8	Bolts - no nuts	Hot dip galvanized	19 dia.	38	Hex. bolt - no nuts		0.145	1.16
C6	42	Bolts c/w hex. nuts	Hot dip galvanized	13 dia.	38	Hex. bolt c/w 1 hex. nut		0.070	2.94
C7	12	Bolts c/w hex. nuts	Hot dip galvanized	22 dia.	65	Hex. bolt c/w 1 hex. nut		0.215	2.58
	12	Edge screed angle	Hot dip galvanized	L38x38x4.8	6 000	As detailed		16.020	192.24
	42	Edge screed retainers	Hot dip galvanized						35.41
		Each unit to be fabricated from :							
		1 - Plate		PL5x95	150	As detailed	0.549	0.549	
		1 - Plate		PL5x50	150	As detailed	0.294	0.294	
								0.843	
	20	Standard flat washer	Hot dip galvanized	for 22 dia. bolts		1 per bolt Mk. "C4" & "C7"		0.032	0.64
	232	Standard flat washer	Hot dip galvanized	for 19 dia. bolts		1 per bolt Mk. "C1", "C2", "C3" & "C5"		0.022	5.10
	42	Standard flat washer	Hot dip galvanized	for 13 dia. bolts		1 per bolt Mk. "C6"		0.010	0.42
	232	Standard lock washer	Hot dip galvanized	for 19 dia. bolts		1 per bolt Mk. "C1", "C2", "C3" & "C5"		0.019	4.41
	42	Standard lock washer	Hot dip galvanized	for 13 dia. bolts		1 per bolt Mk. "C6"		0.007	0.29
	20	Standard lock washer	Hot dip galvanized	for 22 dia. bolts		1 per bolt Mk. "C4" & "C7"		0.027	0.54
RS1	84	Shims	Hot dip galvanized	PL3x150	190	As detailed		0.506	42.50
RS2	84	Shims	Hot dip galvanized	PL5x150	190	As detailed		0.843	70.81
RS3	252	Shims	Hot dip galvanized	PL3x150	100	As detailed		0.291	73.33
RS4	84	Shims	Hot dip galvanized	PL5x150	100	As detailed		0.486	40.82
RS5	168	Shims	Hot dip galvanized	PL3x140	150	As detailed		0.394	66.19
								TOTAL MASS (kg) =	6341.57

NOTES:

1. HSS rail shall conform to CAN/CSA-G40.21-M92 Grade 350W.
2. All steel plates shall conform to the requirements of CAN/CSA-G40.21-M92 Grade 300W.
3. W150 x 30 railpost shall conform to CAN/CSA-G40.21-M92 Grade 350W.
4. Welding shall meet the current requirements of the American Welding Society, Structural Welding Code ANSI/AASHTO/AWS D1.5.
5. All bolts hall conform to the requirements of ASTM A307 or approved equal, unless noted otherwise.
6. All material noted in the above Bill shall be hot dip galvanized after fabrication in accordance with CSA G164 for a minimum net retention of 610 g/m2 unless otherwise stated in the specified material ASTM standards. The fabricator and galvanizer shall safeguard against embrittlement using recommended practices from applicable standards.
7. Seal all welds prior to galvanizing.
8. Apply Galvaloy to all field welds and areas where galvanizing has been damaged.
9. All bolts and threaded rod in the above Bill shall be Imperial thread.

REVISIONS

DATE	BY	DESCRIPTION

DESIGN SEAL | RECORD SEAL

RAILPOST DETAILS

Manitoba Infrastructure
Water Management and Structures

RELEASED FOR CONSTRUCTION
BY:
EXECUTIVE DIRECTOR OF STRUCTURES DATE

DESIGN — BY: — CHECKED:
DETAILS — BY: — CHECKED:

SCALE: 1 : 5 or as shown
SHEET No.
SITE No.

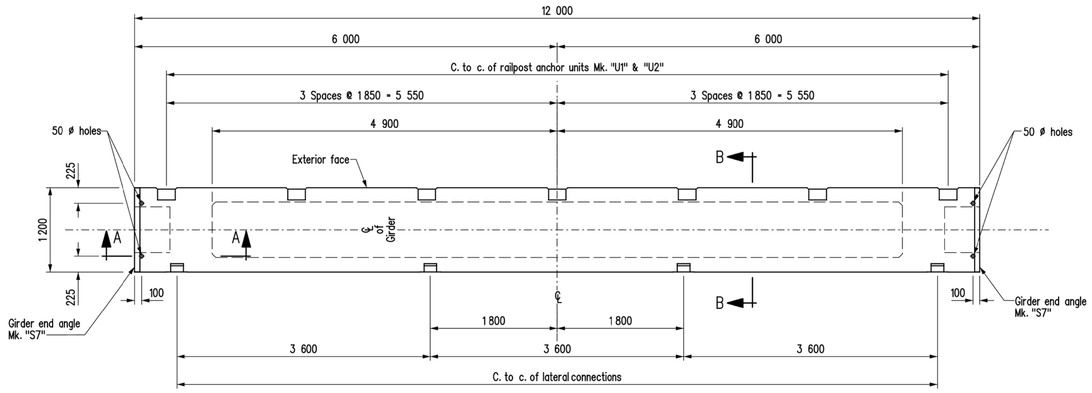

PLAN

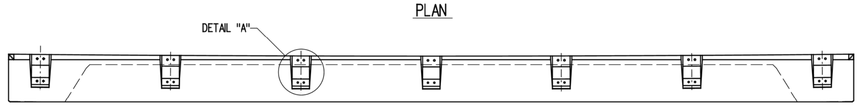

EXTERIOR ELEVATION

EXTERIOR GIRDER MK. "G1"

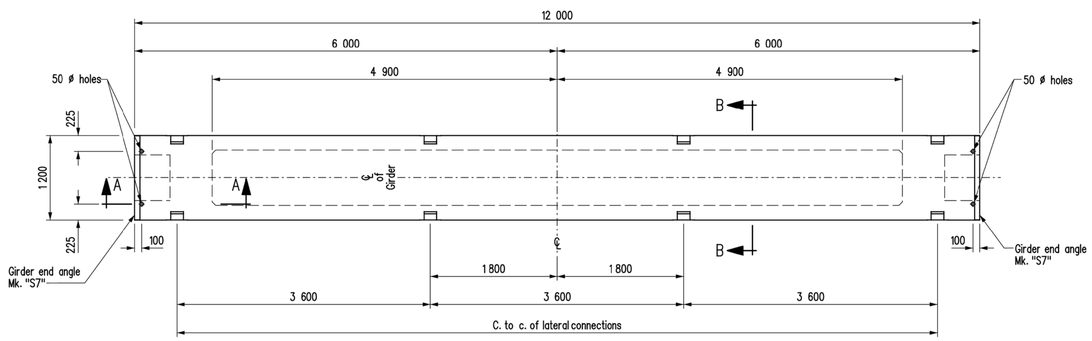

PLAN

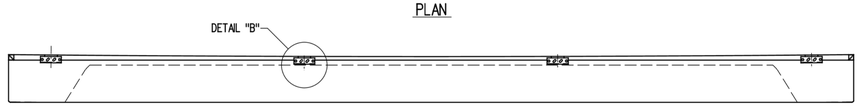

ELEVATION

INTERIOR GIRDER MK. "G2"

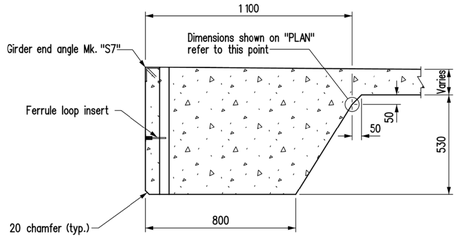

SECTION A-A

Typical at both ends of girders
Scale 1:15

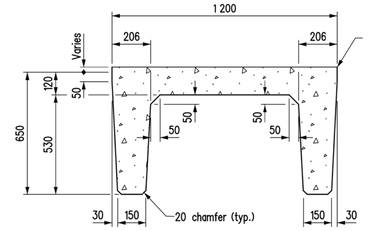

SECTION B-B

Scale 1:15

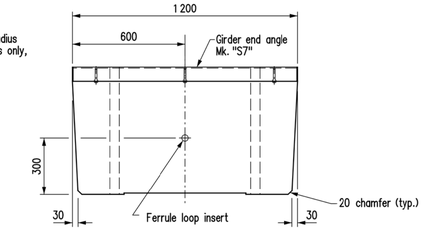

END VIEW

Scale 1:15

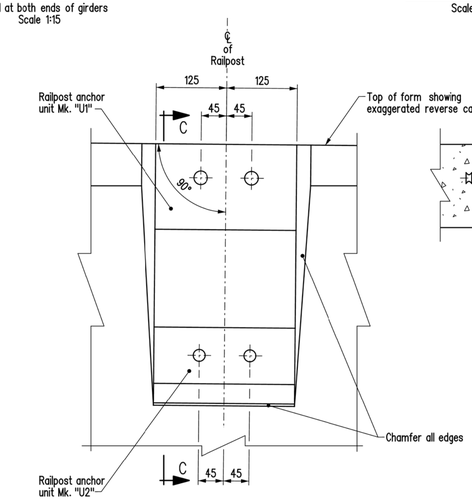

ELEVATION

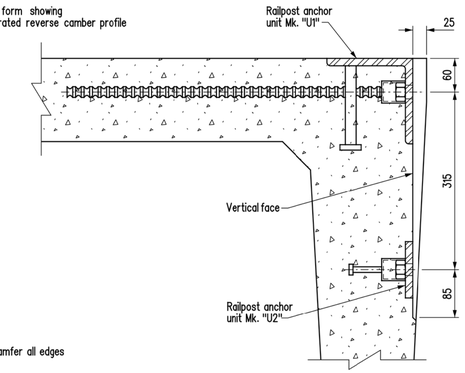

SECTION C-C

DETAIL "A"

Scale 1:5

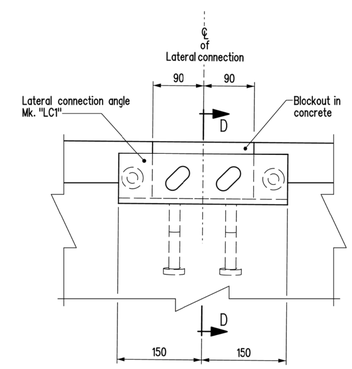

ELEVATION

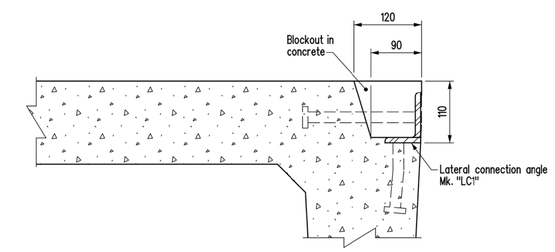

SECTION D-D

DETAIL "B"

Scale 1:5

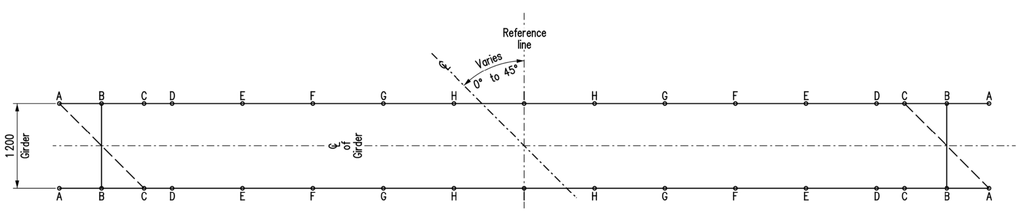

PLAN

NOTE: Top surface of girder shall be screeded perpendicular to side forms

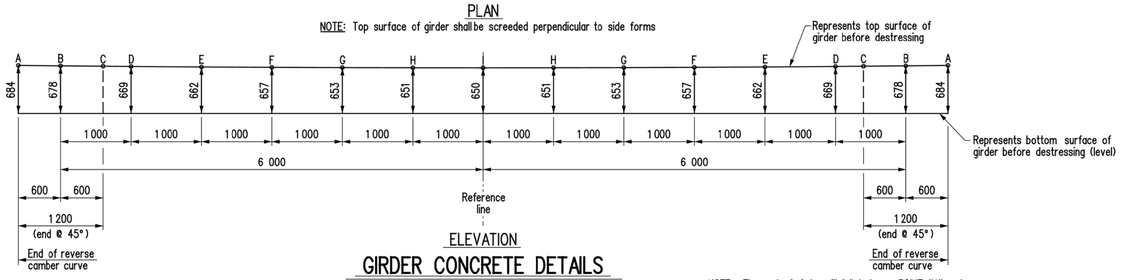

ELEVATION

GIRDER CONCRETE DETAILS

Showing variable depth of girder to eliminate camber on top surface after destressing

NOTE: The end of girder will fall between POINT "A" and POINT "C" on curve because of various skew angles.

NOTES:

1. Design in accordance with AASHTO LRFD Bridge Design Specifications, First Edition, 1994 plus 1996/1997 interim's.
2. Design Vehicular Live Load: Modified AASHTO HSS-25
   AASHTO LRFD "HL-93"
3. Design distribution factor = 0.5 lanes/girder.
4. Concrete strength: @ transfer, f'ci = 35 MPa
   @ 28 days, f'c = 45 MPa
5. Prestressing steel: 13 mm ø low relaxation strands
   Minimum ultimate strength, fpu = 1 860 MPa
   Jacking force/strand, fpj = 128.5 kN/strand
6. Girder dimensioning tolerances: Length 3 mm ±
   Cross section 2 mm ±
7. Approximate mass per girder = 12 000 kg

REVISIONS		
DATE	BY	DESCRIPTION

DESIGN SEAL | RECORD SEAL

PLACE ENGINEERS ELECTRONIC SEAL HERE

PRECAST PRESTRESSED CHANNEL GIRDER DETAILS

Manitoba
Infrastructure
Water Management and Structures

RELEASED FOR CONSTRUCTION
BY:
EXECUTIVE DIRECTOR OF STRUCTURES DATE

DESIGN	BY: B.A.N.	SCALE: Scale 1 : 40	SHEET No. G1
	CHECKED:		
DETAILS	BY: K.P.	or as shown	SITE No.
	CHECKED:		

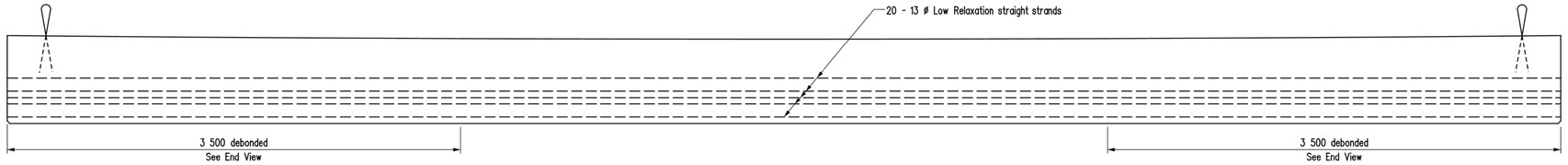

ELEVATION

GIRDER STRAND LAYOUT

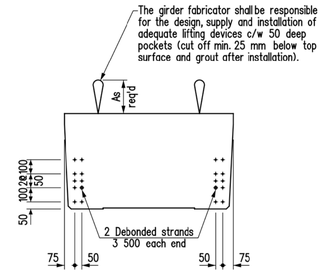

END VIEW

Typical layout of 20 - 13 ø
Low Relaxation straight strands

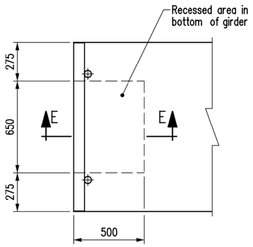

PART PLAN

Typical at both ends of girders

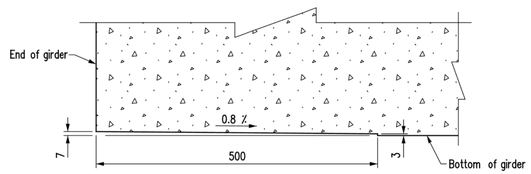

SECTION E-E

Scale 1:5

BEARING RECESS DETAILS

REVISIONS		
DATE	BY	DESCRIPTION

DESIGN SEAL	RECORD SEAL
PLACE ENGINEERS ELECTRONIC SEAL HERE	

PRECAST PRESTRESSED CHANNEL GIRDER DETAILS

Manitoba
Infrastructure
Water Management and Structures

RELEASED FOR CONSTRUCTION
BY:

EXECUTIVE DIRECTOR OF STRUCTURES DATE

DESIGN	BY: B.A.N.	SCALE: Scale 1 : 20 or as shown
	CHECKED:	SHEET No. G2
DETAILS	BY: K.P.	
	CHECKED:	SITE No.

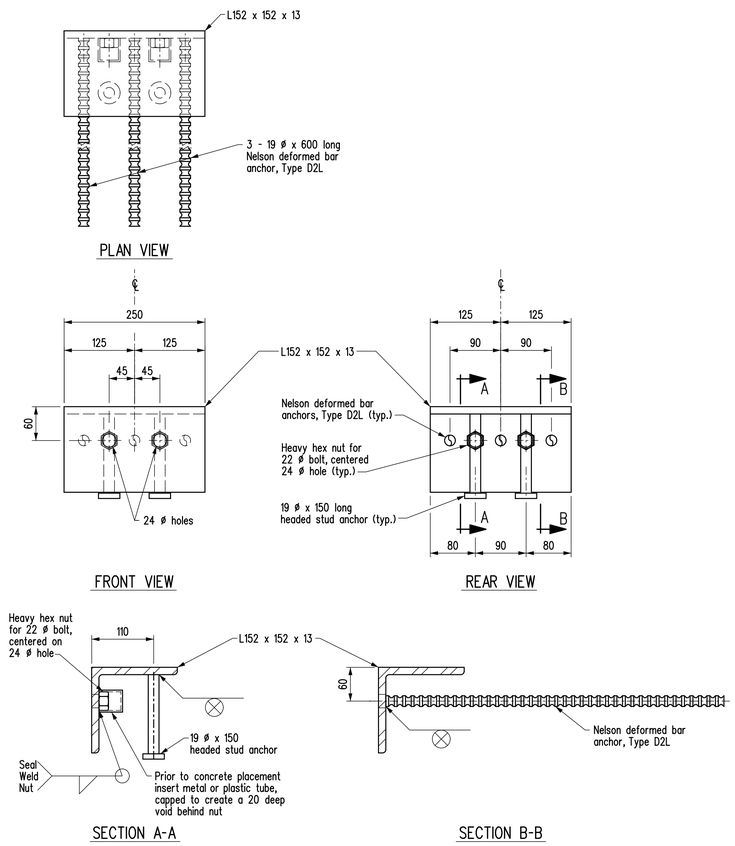

RAILPOST ANCHOR UNIT MK. "U1"

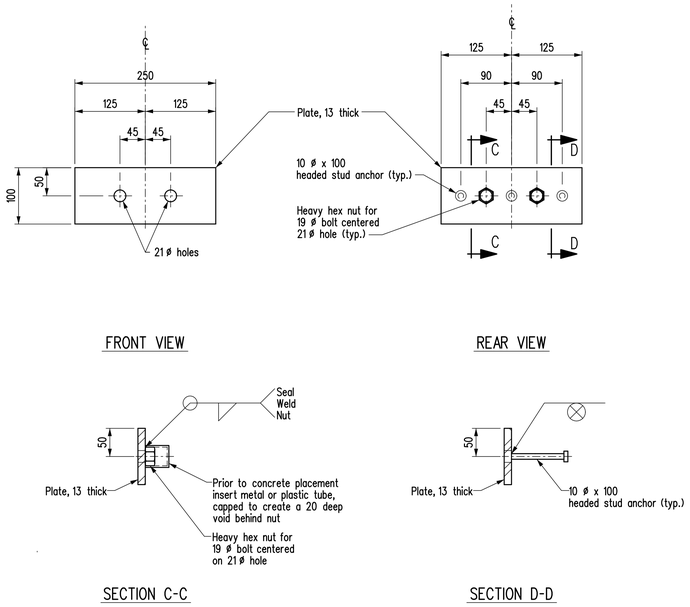

RAILPOST ANCHOR UNIT MK. "U2"

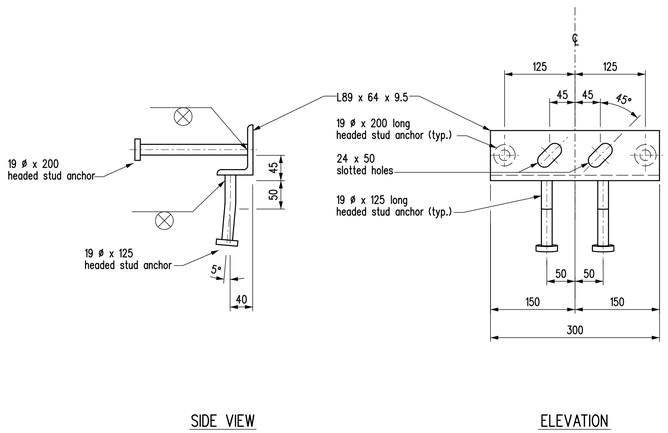

LATERAL CONNECTION ANGLE MK. "LC1"

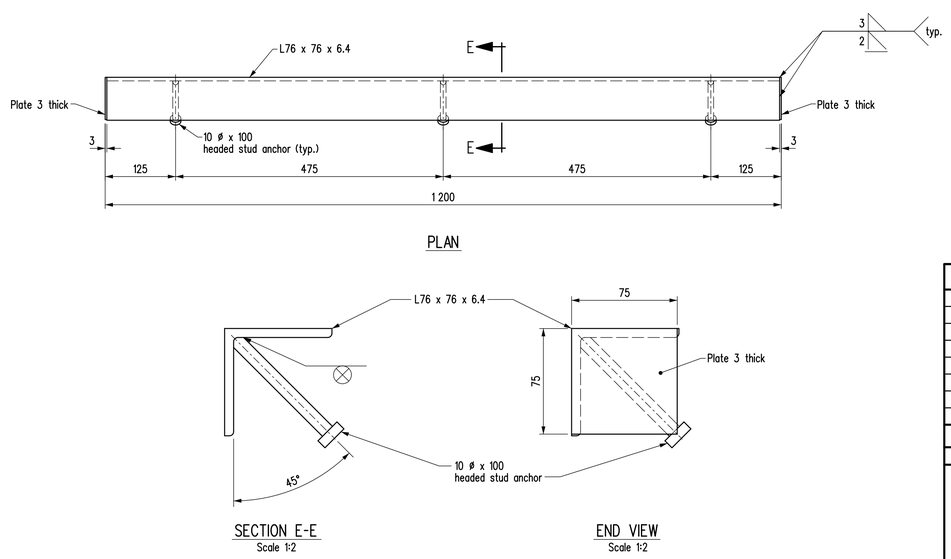

GIRDER END ANGLE MK. "S7"

BILL OF MISCELLANEOUS METAL

for 12 m LONG GIRDERS
12 000 ROADWAY WIDTH - 3 SPAN

Site No.

MARK No.	No.	DESCRIPTION	CORROSION PROTECTION	SIZE	LENGTH	REMARKS
U1	42	Railpost anchor unit	Hot dip galvanized			
		Each unit is fabricated from:				
		1 - Angle		L152x152x13	250	As detailed
		2 - Heavy hex. nuts		for 22 dia. bolt		Grade DH or 2H
		2 - Studs		19 dia.	150	Headed stud anchors, ASTM A108
		3 - Bars		for 19 dia. bolt	600	Nelson deformed bar anchors, Type D2L
		2 - Tubes				Metal or plastic capped - As detailed
U2	42	Railpost anchor unit	Hot dip galvanized			
		Each unit is fabricated from:				
		1 - Plate		PL 13x100	250	As detailed
		2 - Heavy hex. nuts		for 19 dia. bolt		Grade DH or 2H
		3 - Studs		10 dia.	100	Headed stud anchors, ASTM A108
		2 - Tubes				Metal or plastic capped - As detailed
LC1	216	Lateral connection angle	Hot dip galvanized			
		Each unit is fabricated from:				
		1 - Angle		L89x64x9.5	300	As detailed
		2 - Studs		19 dia.	200	Headed stud anchors, ASTM A108
		2 - Studs		19 dia.	125	Headed stud anchors, ASTM A108
S7	60	Girder end angle	Hot dip galvanized			
		Each unit is fabricated from:				
		1 - Angle		L76x76x6.4	1 194	As detailed
		2 - Plates		PL 3x75	75	As detailed
		3 - Studs		10 dia.	100	Headed stud anchors, ASTM A108
	60	Ferrule loop insert	Stainless steel	for 13 dia. bolt		Richmond anchor, Type LF-W with mounting washer
TR2	20	Threaded rod	Stainless steel	13 dia.	250	c/w hex. nut
R27	84	A325 bolt c/w F436 hardened washer	Hot dip galvanized	22 dia.	229	Heavy hex. no nut, ASTM F3125
R28	84	A325 bolt c/w F436 hardened washer	Hot dip galvanized	19 dia.	64	Heavy hex. no nut, ASTM F3125

NOTES:

1. All material in the above Bill shall be supplied by the GIRDER CONTRACTOR.
2. All structural steel shall conform to CAN/CSA G40.21-M92 Grade 300W.
3. All material noted in the above Bill shall be hot dip galvanized after fabrication in accordance with CSA G164 for a minimum net retention of 610 g/m2 unless otherwise stated in the specified material ASTM standards. The fabricator and galvanizer shall safeguard against embrittlement using recommended practices from applicable standards.
4. Seal all welds prior to galvanizing.
5. Grade DH or 2H galvanized nuts for A325 bolts shall be overtapped to a minimum amount required for the fastener assembly in accordance with ASTM F3125. The nuts shall be lubricated with a lubricant containing a visible dye. The lubricant shall be clean and dry to the touch.
6. All bolts and inserts in the above Bill shall be Imperial thread.
7. Stainless steel shall conform to the requirements of ASTM A320, Class B8.

REVISIONS

DATE	BY	DESCRIPTION

DESIGN SEAL | RECORD SEAL

PLACE ENGINEERS ELECTRONIC SEAL HERE

PRECAST PRESTRESSED CHANNEL GIRDER DETAILS

Manitoba
Infrastructure
Water Management and Structures

RELEASED FOR CONSTRUCTION
BY:

EXECUTIVE DIRECTOR OF STRUCTURES DATE

DESIGN — BY: B.A.N. — CHECKED:

DETAILS — BY: K.P. — CHECKED:

SCALE: Scale 1:5 or as shown

SHEET No. G3

SITE No.

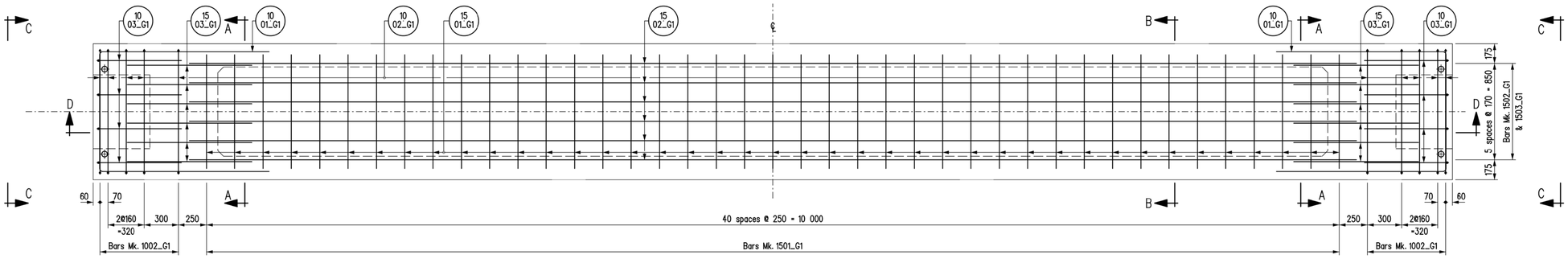

PLAN OF GIRDER

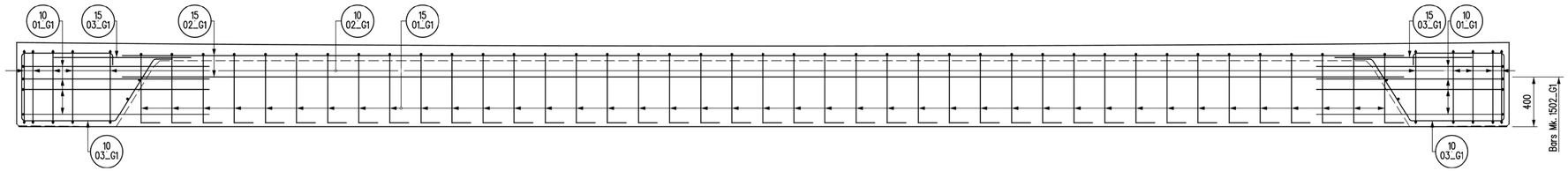

ELEVATION OF GIRDER

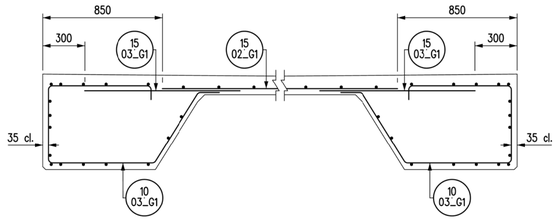

PART SECTION D-D

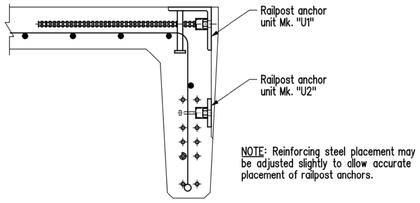

NOTE: Reinforcing steel placement may be adjusted slightly to allow accurate placement of railpost anchors.

DETAIL AT RAILPOST ANCHOR

Scale 1:10

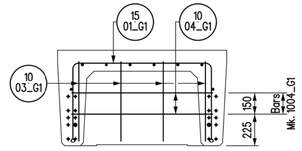

SECTION A-A

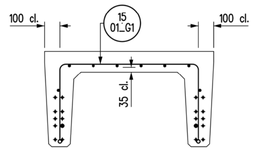

SECTION B-B

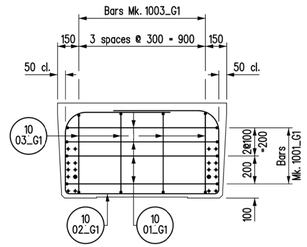

END VIEW C-C

NOTES:

1. Concrete cover shall be 25 mm unless noted otherwise.
2. Reinforcing details are typical for all 12 m girders unless noted otherwise.
3. Bar Mark labels with suffix _G1 are Exterior girders and suffix _G2 are Interior girders. See Bill of Reinforcing Sheet No. G .

REVISIONS		
DATE	BY	DESCRIPTION

DESIGN SEAL | RECORD SEAL

PLACE ENGINEERS ELECTRONIC SEAL HERE

PRECAST PRESTRESSED CHANNEL GIRDER DETAILS

Manitoba Infrastructure
Water Management and Structures

RELEASED FOR CONSTRUCTION BY:

EXECUTIVE DIRECTOR OF STRUCTURES DATE

DESIGN	BY: B.A.N.	SCALE: Scale 1 : 20
	CHECKED:	SHEET No. G4
DETAILS	BY: K.P.	or as shown
	CHECKED:	SITE No.

BILL OF REINFORCING STEEL - 12 M GIRDERS — SITE No.

MARK	TYPE	PIN DIAMETER	LENGTH	GIRDER TYPE	No. of GIRDERS	No. of BARS PER GIRDER	TOTAL No. of BARS PER GIRDER TYPE	BENDING DIAGRAM
1001_G1	BENT	45	4 080	G1	6	8	48	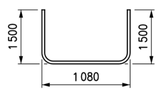
1002_G1	BENT	45	3 660	G1	6	10	60	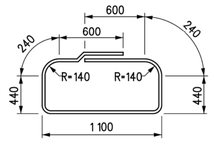
1003_G1	BENT	45	2 950	G1	6	8	48	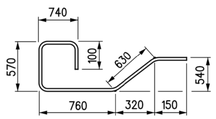
1004_G1	STR		1 000	G1	6	4	24	
1501_G1	BENT	65	2 440	G1	6	41	246	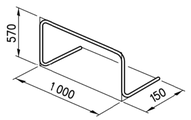
1502_G1	STR		10 300	G1	6	8	48	
1503_G1	STR		1 100	G1	6	12	72	
1001_G2	BENT	45	4 080	G2	24	8	192	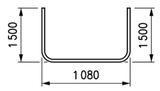
1002_G2	BENT	45	3 660	G2	24	10	240	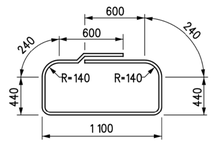
1003_G2	BENT	45	2 950	G2	24	8	192	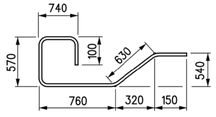
1004_G2	STR		1 000	G2	24	4	96	

BILL OF REINFORCING STEEL - 12 M GIRDERS — SITE No.

MARK	TYPE	PIN DIAMETER	LENGTH	GIRDER TYPE	No. of GIRDERS	No. of BARS PER GIRDER	TOTAL No. of BARS PER GIRDER TYPE	BENDING DIAGRAM
1501_G2	BENT	65	2 440	G2	24	41	984	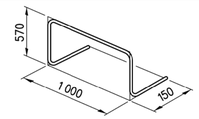
1502_G2	STR		10 300	G2	24	8	192	
1503_G2	STR		1 100	G2	24	12	288	

Total volume of structural concrete per exterior girder	4.94 m³
Total volume of structural concrete per interior girder	4.93 m³

NOTES:

1. All dimensions given in bending diagram are out to out, except radii and extensions on 90°, 135° & 180° hooks. Extensions on 90°, 135° & 180° hooks are the "A" or "G" dimensions for standard 90°, 135° & 180° hooks referenced from the RSIC "Manual of Standard Practice". Radii are inside dimensions. All reinforcing steel bends and hooks shall conform to Clause 6.6.2 of C.S.A. A23.1-04, unless noted otherwise in the BILL OF REINFORCING STEEL.
2. All reinforcing steel shall be deformed steel, unless noted otherwise in the BILL OF REINFORCING STEEL.
3. All reinforcing steel shall conform to CSA G30.18-M92 "Billet Steel Bars for Concrete Reinforcement" Grade 400W, unless noted otherwise in the BILL OF REINFORCING STEEL.
4. Like bars shall be bundled, securely tied and identified as to Mark and Site No. by appropriate means. All other items to be identified in a similar fashion.
5. All bars shall be bent in accordance with the following detail:

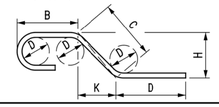

REVISIONS		
DATE	BY	DESCRIPTION

DESIGN SEAL | RECORD SEAL

PLACE ENGINEERS ELECTRONIC SEAL HERE

PRECAST PRESTRESSED CHANNEL GIRDER DETAILS

Manitoba Infrastructure
Water Management and Structures

RELEASED FOR CONSTRUCTION BY:

EXECUTIVE DIRECTOR OF STRUCTURES — DATE

DESIGN	BY: B.A.N.	SCALE:
	CHECKED:	SHEET No. G5
DETAILS	BY: K.P.	
	CHECKED:	SITE No.

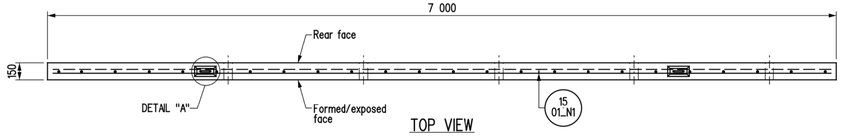

TOP VIEW

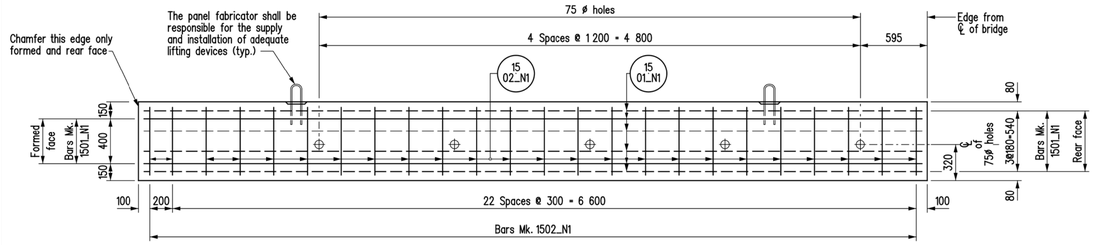

ELEVATION

PRECAST PANEL Mk."N1" & "N1a"

Panel Mk."N1" shown, Panel Mk."N1a" opposite hand.

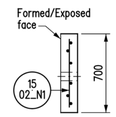

TYPICAL SECTION

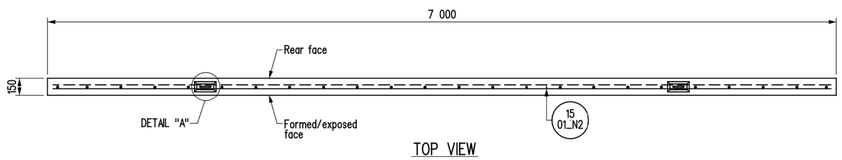

TOP VIEW

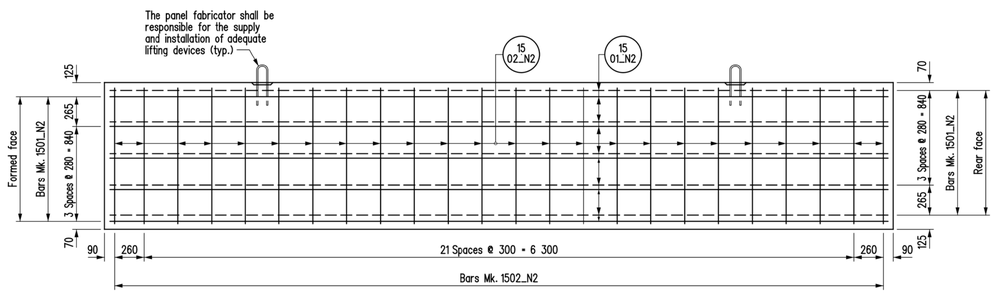

ELEVATION

PRECAST PANEL Mk. "N2"

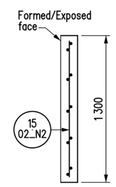

TYPICAL SECTION

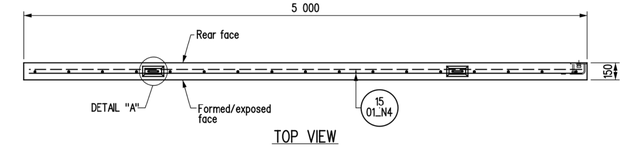

TOP VIEW

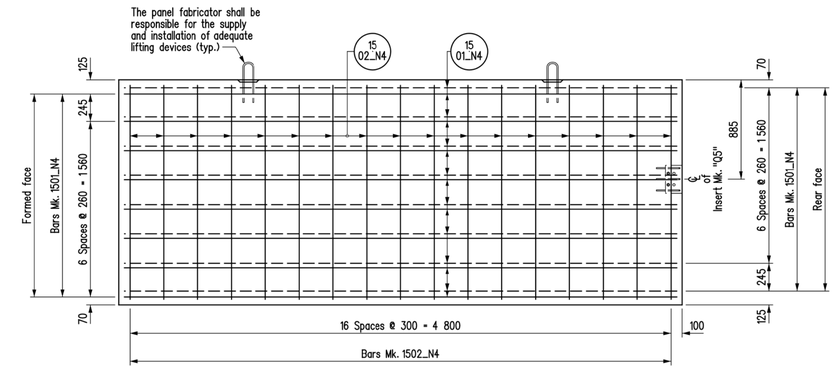

ELEVATION

PRECAST PANEL Mk. "N4" & "N4a"

Panel Mk."N4" shown, "N4a" similar except location of insert Mk."Q5" at opposite end.

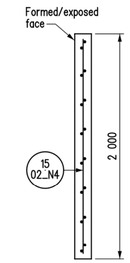

TYPICAL SECTION

NOTES:

1. All panel exposed edges to be chamfered 20 mm except no chamfer on panels Mk. "N1" & "N1a", or if shown.
2. Mark reinforcing steel location on the edges of the back face of panels after casting.
3. Concrete cover shall be 50 mm unless noted otherwise.
4. Formed face to be placed as exposed face during construction.
5. After precast panel installation, all lifting devices to be cut-off flush and grouted as directed by Engineer.
6. For DETAIL "A" see sheet No. P2.
7. For BILL OF REINFORCING STEEL see Sheet No. P2.

REVISIONS		
20__-__-__		ISSUED FOR CONSTRUCTION
DATE	BY	DESCRIPTION

DESIGN SEAL	RECORD SEAL
PLACE ENGINEERS ELECTRONIC SEAL HERE	

PRECAST PANEL DETAILS

Manitoba
Infrastructure
Water Management and Structures

RELEASED FOR CONSTRUCTION BY:

EXECUTIVE DIRECTOR OF STRUCTURES DATE

DESIGN	BY: B.A.N./	SCALE: 1 : 25	SHEET No. P1
	CHECKED:		
DETAILS	BY:	or as shown	SITE No.
	CHECKED:		

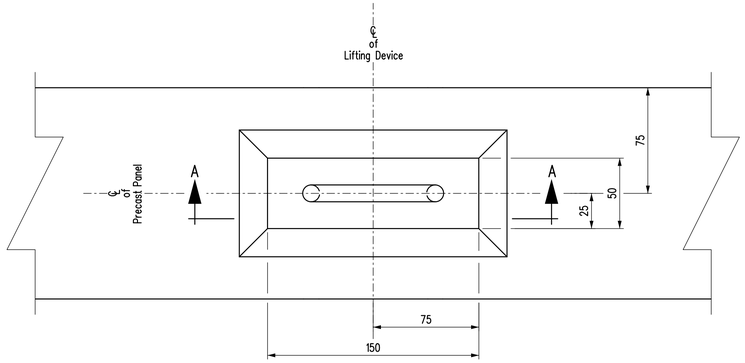

PLAN

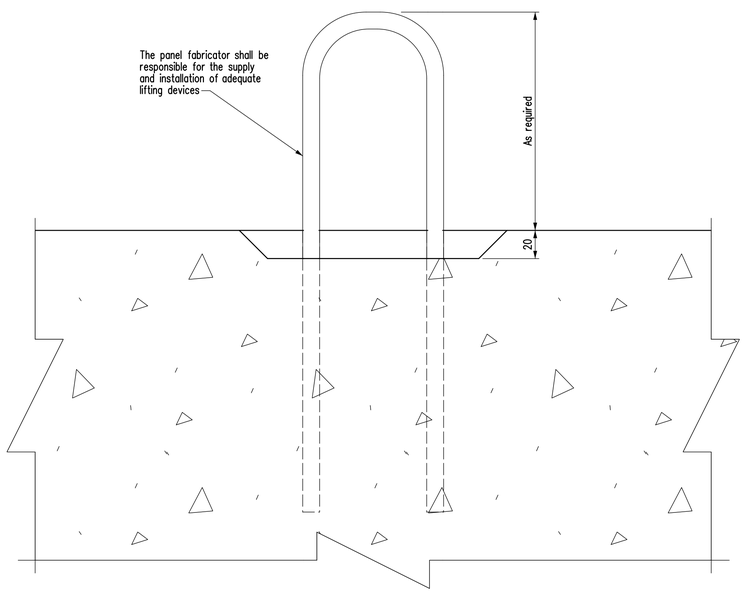

SECTION A-A

DETAIL "A"

BILL OF REINFORCING

FOR PRECAST PANELS

SITE No. ____-__

MARK	TYPE	PIN DIAMETER	LENGTH	PANEL TYPE	No. of PANELS	No. of BARS PER PANEL	TOTAL No. of BARS PER PANEL TYPE	BENDING DIAGRAM
1501_N1	STR		6 900	N1	2	6	12	
1502_N1	STR		600	N1	2	24	48	
1501_N1a	STR		6 900	N1a	2	6	12	
1502_N1a	STR		600	N1a	2	24	48	
1501_N2	STR		6 900	N2	4	10	40	
1502_N2	STR		1 200	N2	4	24	96	
1501_N4	STR		4 900	N4	2	16	32	
1502_N4	STR		1 900	N4	2	17	34	
1501_N4a	STR		4 900	N4a	2	16	32	
1502_N4a	STR		1 900	N4a	2	17	34	

Total mass of reinforcing steel 1659.80 kg

Panel Type	N1	N1a	N2	N3	N4	N4a
Area m²/panel	4.90	4.90	9.10	-	10.00	10.00

Total area of precast Panels 96.00 m²

NOTES:

1. All dimensions given in bending diagram are out to out, except radii and extensions on 90°, 135° & 180° hooks. Extensions on 90°, 135° & 180° hooks are the "A" of "G" dimensions for standard 90°, 135° & 180° hooks referenced from the RSIC "Manual of Standard Practice". Radii are inside dimensions. All reinforcing steel bends and hooks shall conform to Clause 6.6.2 of C.S.A. A23.1-04, unless noted otherwise in the BILL OF REINFORCING STEEL.
2. All reinforcing steel shall be deformed steel, unless noted otherwise in the BILL OF REINFORCING STEEL.
3. All reinforcing steel shall conform to CSA G30.18-M92 "Billet Steel Bars for Concrete Reinforcement" Grade 400W, unless noted otherwise in the BILL OF REINFORCING STEEL.
4. Like bars shall be bundled, securely tied and identified as to Mark and Site No. by appropriate means. All other items to be identified in a similar fashion.
5. All bars shall be bent in accordance with the following detail:

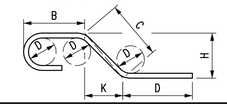

BILL OF MISCELLANEOUS METAL for PRECAST PANELS

Site No.

MARK No.	No.	DESCRIPTION	CORROSION PROTECTION	SIZE	LENGTH	REMARKS
Q5	4	Insert units	Hot dip galvanized			
		Each unit is fabricated from:				
		Steel plate		PL 10 x 150	250	As detailed
		2 - Studs Mk. "A1"		13 dia.	75	Nelson headed concrete anchors, Type H4L, Part No. 101-053-002 - As detailed
		3 - Bars Mk. "A2"		10 dia.	300	Nelson deformed bar anchors, Type D2L, Part No. 101-064-537 - As detailed
		2 - Heavy hex. nuts		for 19 dia. bolt		Grade DH or 2H heavy hex. nut, c/w metal or plastic sleeve
R34	8	A325 bolt c/w F436 hardened washer		19 dia.	60	

NOTES:

1. All material noted in the above Bill shall be hot dip galvanized after fabrication in accordance with CSA G164 for a minimum net retention of 610 g/m2 unless otherwise stated in the specified material ASTM standards. The fabricator and galvanizer shall safeguard against embrittlement using recommended practices from applicable standards.
2. Seal all welds prior to galvanizing.
3. All structural steel to be CSA G40.21 Grade 300W.
4. All bolts and inserts in the above Bill shall be Imperial thread.

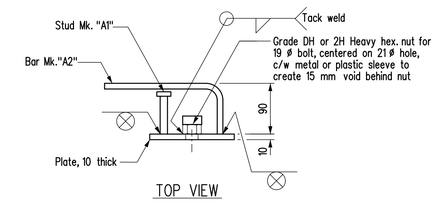

TOP VIEW

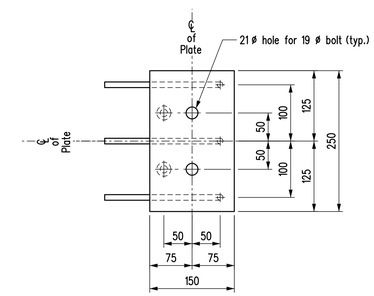

FRONT VIEW

INSERT Mk. "Q5"

Scale 1:5

NOTES:

1. For location of DETAIL "A" see sheet No. P1.
2. Precast panel concrete strength: f'c = 35 MPa.

REVISIONS		
20__/__/__	__.__.__	ISSUED FOR CONSTRUCTION
DATE	BY	DESCRIPTION

PRECAST PANEL DETAILS

DESIGN SEAL | RECORD SEAL

PLACE ENGINEERS ELECTRONIC SEAL HERE

Manitoba
Infrastructure
Water Management and Structures

RELEASED FOR CONSTRUCTION BY:

EXECUTIVE DIRECTOR OF STRUCTURES DATE

DESIGN	BY: B.A.N./__.__.__	SCALE: 1:2	SHEET No. P2
	CHECKED:		
DETAILS	BY: __.__.__	or as shown	SITE No. ____
	CHECKED:		