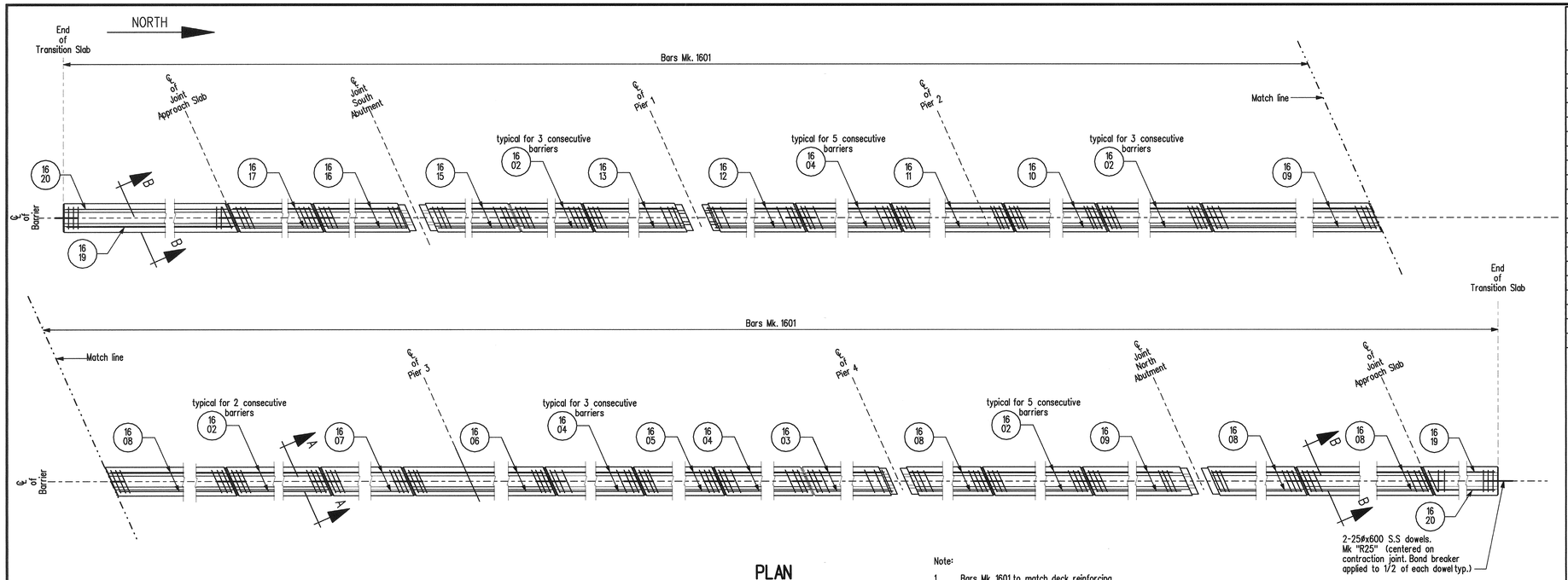

PLAN

Median Barrier Reinforcing Layout
Stage 3

Note:

1. Bars Mk. 1601 to match deck reinforcing.
2. Read this drawing with Concrete Details - Sheet 108 and Deck Reinforcing Details - Sheets 80, 82, 84 and 85.

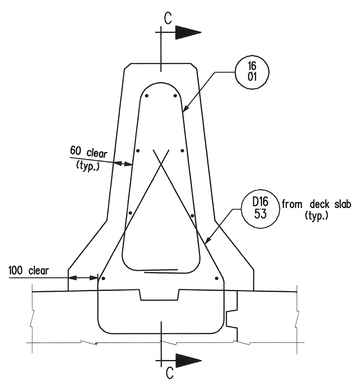

SECTION A-A

Typical through bridge deck
Scale 1 : 10

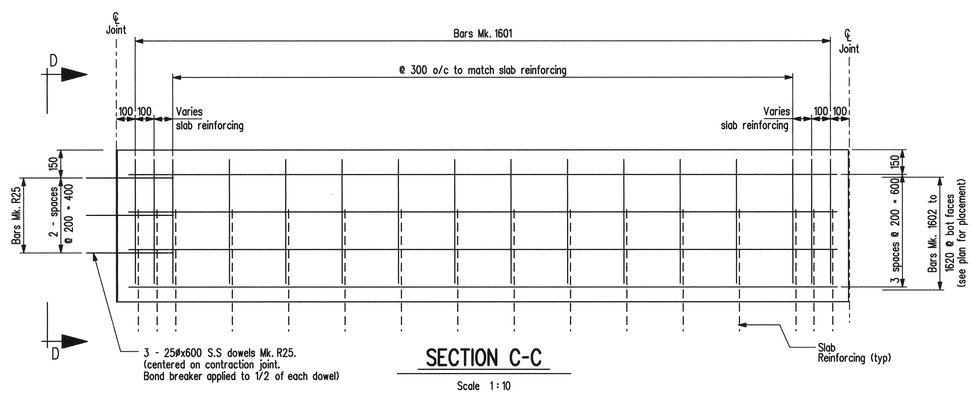

SECTION C-C

Scale 1 : 10

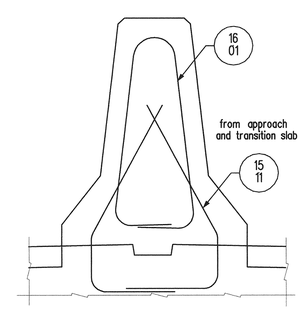

SECTION B-B

Typical through transition & approach slab
Scale 1 : 10

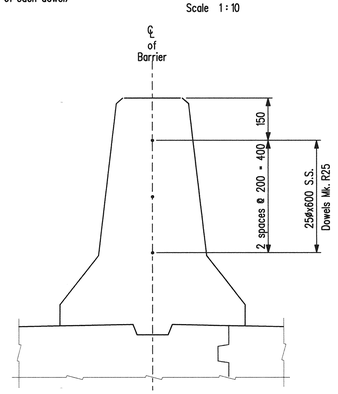

SECTION D-D

Typical @ joints
Scale 1 : 10

BILL OF REINFORCING STEEL (MMFX - 2) FOR STAGE 3 MEDIAN BARRIER

SITE No. 2924-00

MARK	TYPE	PIN DIAMETER	LENGTH	No.	MASS
1601	BENT	90	1 880	676	1972.41
1602	STR		3 730	112	648.36
1603	STR		2 750	8	34.14
1604	STR		3 830	72	427.98
1605	STR		4 630	8	57.49
1606	STR		5 190	8	64.44
1607	STR		4 300	8	53.39
1608	STR		4 030	16	100.07
1609	STR		2 900	24	108.02
1610	STR		3 680	8	45.69
1611	STR		3 690	8	45.82
1612	STR		4 220	8	52.40
1613	STR		4 720	8	58.60
1614	STR		2 030	8	25.20
1615	STR		3 840	8	47.68
1616	STR		3 400	16	84.43
1617	STR		3 490	16	86.66
1619	STR		7 470	8	92.75
1620	STR		7 300	8	90.64

BENDING DIAGRAM

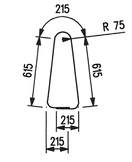

Bar Mk. 1601

Total mass of reinforcing steel	4096.16 kg
Total volume of structural concrete	54.29 m³

NOTES:

1. All dimensions given in bending diagram are out to out, except radii and extensions on 90°, 135° & 180° hooks. Extensions on 90°, 135° & 180° hooks are the "A" or "G" dimensions for standard 90°, 135° & 180° hooks referenced from the RSIC "Manual of Standard Practice". Radii are inside dimensions. All reinforcing steel bends and hooks for low carbon chromium steel bars shall conform to the same requirements listed for C.S.A. G30.18 Grade 400W in Clause 6.6.2 of C.S.A. A23.1-04, unless noted otherwise in the BILL OF REINFORCING STEEL (MMFX - 2).
2. All reinforcing steel shall be deformed steel, unless noted otherwise in the BILL OF REINFORCING STEEL (MMFX - 2)
3. All reinforcing steel shall be low carbon chromium steel bars conforming to ASTM A615 Grade 75 and ASTM A1035 unless noted otherwise in the BILL OF REINFORCING STEEL (MMFX - 2)
4. Like bars shall be bundled, securely tied and identified as to Mark and Site No. by appropriate means. All other items to be identified in a similar fashion.
5. All bars shall be bent in accordance with the following detail:

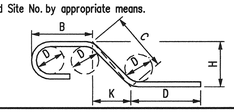

REVISIONS

DATE	BY	DESCRIPTION

PROVINCE OF MANITOBA
Mar 15/10
S.S RIHAL
REGISTERED PROFESSIONAL ENGINEER

MEDIAN BARRIER -STAGE 3- REINFORCING DETAILS

RECONSTRUCTION AND STRENGTHENING OF EXISTING BRIDGE
OVER ASSINIBOINE RIVER - CONTRACT THREE
ON P.T.H. No. 100 IN R.L.'S 72, 73 & 94
PARISH OF ST. CHARLES

CITY OF WINNIPEG

Manitoba
Infrastructure and Transportation
Water Control & Structures

RELEASED FOR CONSTRUCTION BY:
Keith Eden March 15/10
DIRECTOR /DATE
STRUCTURES, DESIGN AND CONSTRUCTION BRANCH

DESIGN	BY: MBC	SCALE: 1:50	SHEET No. 109
	CHECKED: SSC		
DETAILS	BY: MP	unless noted	SITE No. 2924-00
	CHECKED: KP		

\292400_Contract3_Barrier_dtl.dgn 2010-03-15 9:29:14 AM