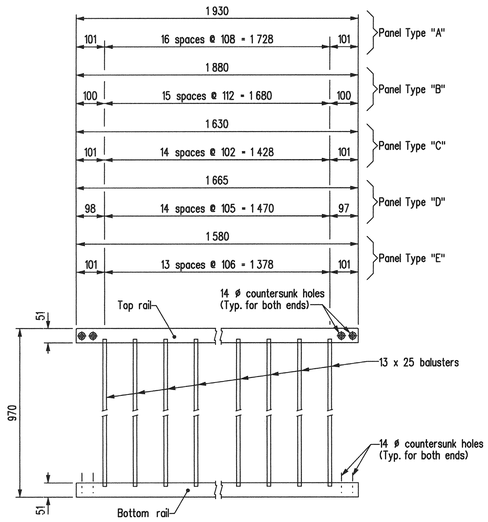

HANDRAIL PANELS TYPE "A", "B", "C", "D" & "E"

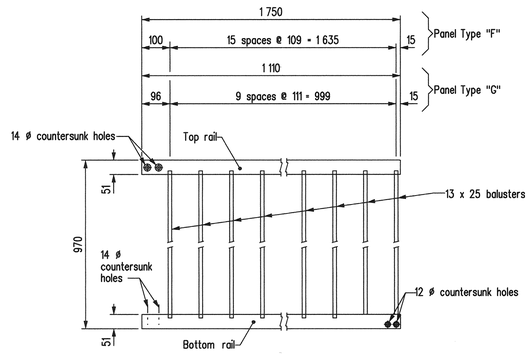

HANDRAIL PANELS TYPE "F" & "G"

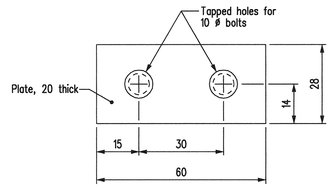

PLATE Mk. "P3"

Scale 1 : 1

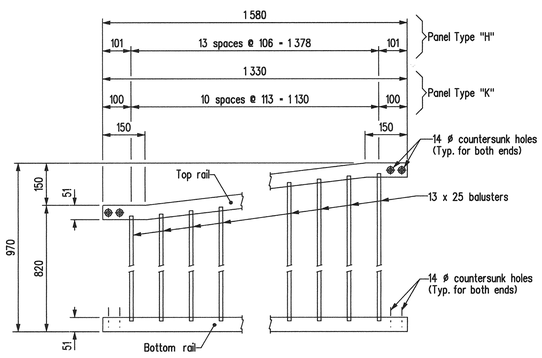

HANDRAIL PANELS TYPE "H"

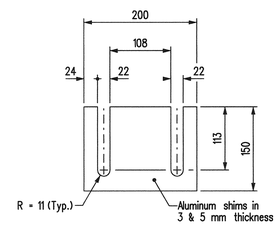

SHIMS

Scale 1 : 5

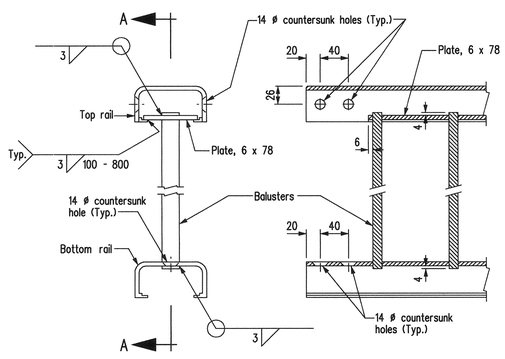

END VIEW SECTION A-A

PANEL DETAILS

Typical for both ends of all panels except expansion end of Panels Type "E" & "F".
Scale 1 : 4

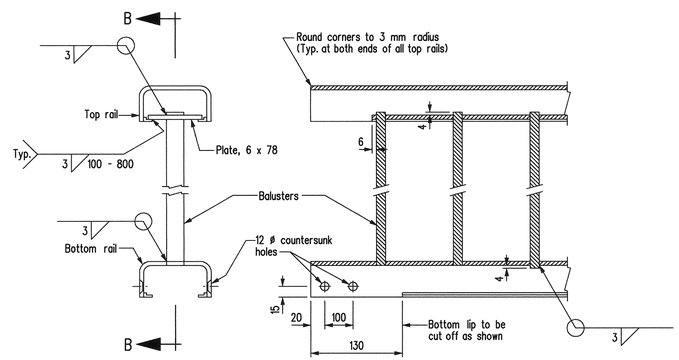

END VIEW SECTION B-B

EXPANSION END DETAILS FOR PANELS TYPE "E" & "F"

Scale 1 : 4

BILL OF MISCELLANEOUS ALUMINUM

FOR PEDESTRIAN HANDRAIL PANELS

Site No. 2924-00

MARK	No.	DESCRIPTION			MASS PER UNIT	TOTAL MASS
A	26	Handrail panel - Each panel to be fabricated from (aluminum):				784.08
		2 rail channels	51 x 102 x 1 930 long	Alcan Ext. No. 840595	14.167	
		17 balusters	13 x 25 x 890 long		13.783	
		1 plate	6 x 78 x 1 753 long		2.207	
					30.157	
B	40	Handrail panel - Each panel to be fabricated from (aluminum):				1 156.72
		2 rail channels	51 x 102 x 1 880 long	Alcan Ext. No. 840595	13.797	
		16 balusters	13 x 25 x 890 long		12.972	
		1 plate	6 x 78 x 1 705 long		2.149	
					28.918	
C	2	Handrail panel - Each panel to be fabricated from (aluminum):				51.83
		2 rail channels	51 x 102 x 1 630 long	Alcan Ext. No. 840595	11.927	
		15 balusters	13 x 25 x 890 long		12.162	
		1 plate	6 x 78 x 1 453 long		1.824	
					25.913	
D	2	Handrail panel - Each panel to be fabricated from (aluminum):				52.63
		2 rail channels	51 x 102 x 1 665 long	Alcan Ext. No. 840595	12.272	
		15 balusters	13 x 25 x 890 long		12.162	
		1 plate	6 x 78 x 1 495 long		1.879	
					26.313	
E	1	Handrail panel - Each panel to be fabricated from (aluminum):				24.67
		2 rail channels	51 x 102 x 1 580 long	Alcan Ext. No. 840595	11.557	
		14 balusters	13 x 25 x 890 long		11.351	
		1 plate	6 x 78 x 1 403 long		1.764	
					24.672	
F	2	Handrail panel - Each panel to be fabricated from (aluminum):				138.63
		2 rail channels	51 x 102 x 1 750 long	Alcan Ext. No. 840595	12.886	
		16 balusters	13 x 25 x 890 long		12.972	
		1 plate	6 x 78 x 1 490 long		1.867	
					27.725	
G	2	Handrail panel - Each panel to be fabricated from (aluminum):				15.83
		2 rail channels	51 x 102 x 1 010 long	Alcan Ext. No. 840595	7.373	
		9 balusters	13 x 25 x 890 long		7.297	
		1 plate	6 x 78 x 921 long		1.159	
					15.829	
H	1	Handrail panel - Each panel to be fabricated from (aluminum):				24.73
		1 top rail channel	51 x 102 x 1 592 long	Alcan Ext. No. 840595	5.826	
		1 bottom rail channel	51 x 102 x 1 580 long	Alcan Ext. No. 840595	5.777	
		14 balusters	13 x 25 x 890 long		11.351	
		1 plate	6 x 78 x 1 415 long		1.779	
					24.733	
J	1	Handrail panel - Each panel to be fabricated from (aluminum):				20.07
		2 rail channels	51 x 102 x 1 330 long	Alcan Ext. No. 840595	9.699	
		11 balusters	13 x 25 x 890 long		8.918	
		1 plate	6 x 78 x 1 153 long		1.453	
					20.070	
K	1	Handrail panel - Each panel to be fabricated from (aluminum):				24.73
		1 top rail channel	51 x 102 x 1 348 long	Alcan Ext. No. 840595	4.910	
		1 bottom rail channel	51 x 102 x 1 330 long	Alcan Ext. No. 840595	4.856	
		11 balusters	13 x 25 x 890 long		8.918	
		1 plate	6 x 78 x 1 173 long		1.479	
					24.733	
P3	12	Guide plate (aluminum)	As Detailed		0.085	1.02
	81	Aluminum shim plate	150 x 200 x 3 thick, as detailed		0.209	16.93
	41	Aluminum shim plate	150 x 200 x 5 thick, as detailed		0.349	14.31
					Total mass of aluminum =	2 326.18 kg

REVISIONS		
DATE	BY	DESCRIPTION

PROVINCE OF MANITOBA
MAR 15/10
S.S RIHAL
REGISTERED PROFESSIONAL ENGINEER

ALUMINUM PEDESTRIAN HANDRAIL DETAILS

RECONSTRUCTION AND STRENGTHENING OF EXISTING BRIDGE
OVER ASSINIBOINE RIVER - CONTRACT THREE
ON P.T.H. No. 100 IN R.L.'S 72, 73 & 94
PARISH OF ST. CHARLES

CITY OF WINNIPEG

Manitoba Infrastructure and Transportation
Water Control & Structures

RELEASED FOR CONSTRUCTION BY:
DIRECTOR — DATE
STRUCTURES, DESIGN AND CONSTRUCTION BRANCH

DESIGN	BY: M.B.C.	SCALE: 1 : 10 or As Shown	SHEET No. 114
	CHECKED: S.S.R.		
DETAILS	BY: D.P.W.		SITE No. 2924-00
	CHECKED: S.S.R.\J.J.		