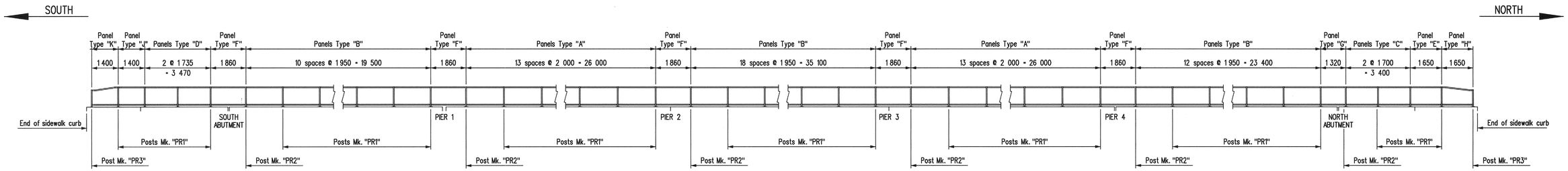

LAYOUT OF PEDESTRIAN HANDRAIL

Scale 1 : 100

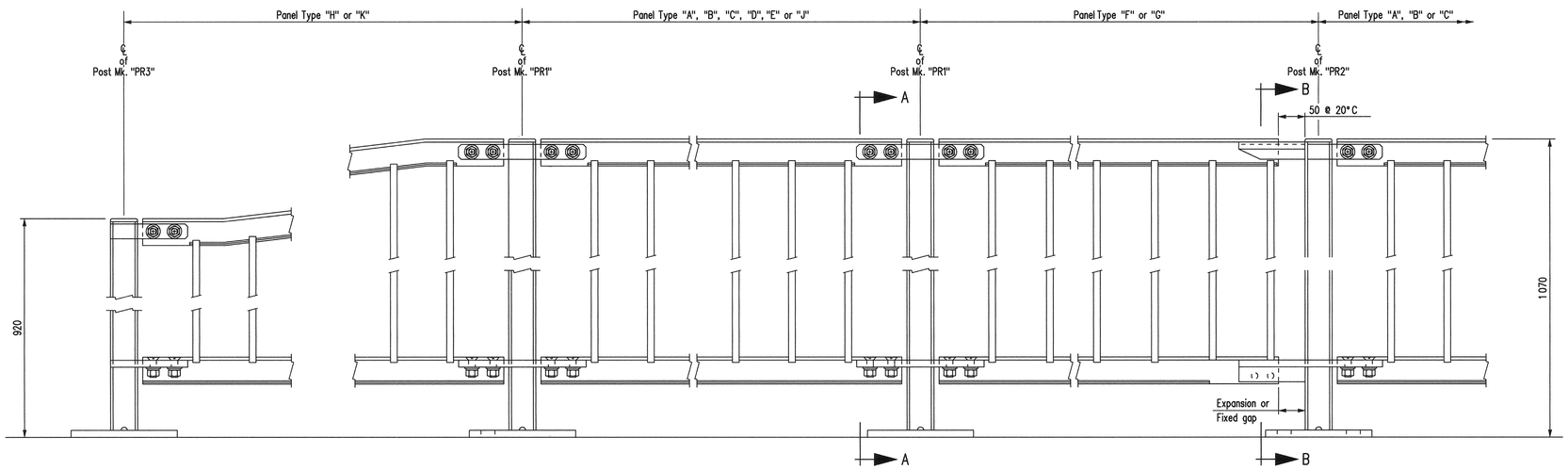

PART LONGITUDINAL SECTION

Scale 1 : 5

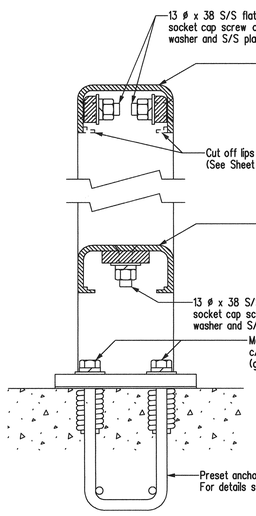

SECTION A-A

Scale 1 : 3

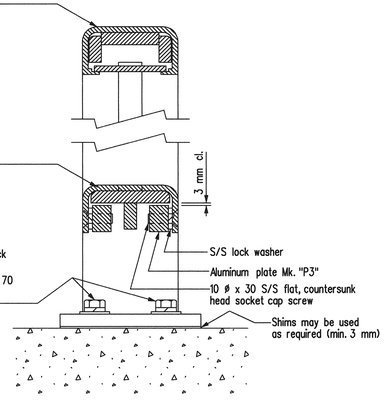

SECTION B-B

At pedestrian handrail expansion joint.
Scale 1 : 3

REVISIONS		
DATE	BY	DESCRIPTION

PROVINCE OF MANITOBA
May 15/10
S.S
RIHAL
REGISTERED PROFESSIONAL ENGINEER

ALUMINUM PEDESTRIAN HANDRAIL

RECONSTRUCTION AND STRENGTHENING OF EXISTING BRIDGE
OVER ASSINIBOINE RIVER - CONTRACT THREE
ON P.T.H. No. 100 IN R.L.'S 72, 73 & 94
PARISH OF ST. CHARLES

CITY OF WINNIPEG

Manitoba
Infrastructure and Transportation
Water Control & Structures

RELEASED FOR CONSTRUCTION BY:
DIRECTOR — DATE
STRUCTURES DESIGN AND CONSTRUCTION BRANCH

DESIGN	BY: M.B.C.	SCALE: As Shown
	CHECKED: S.S.R.	SHEET No. 113
DETAILS	BY: D.P.W.	
	CHECKED: S.S.R./J.J.	SITE No. 2924-00

...\292400contract3rehab.dgn 2010-03-12 3:16:05 PM