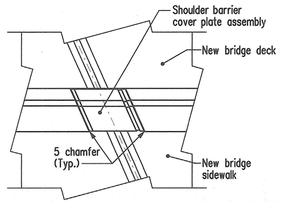

PIER 1 & 4 PLAN

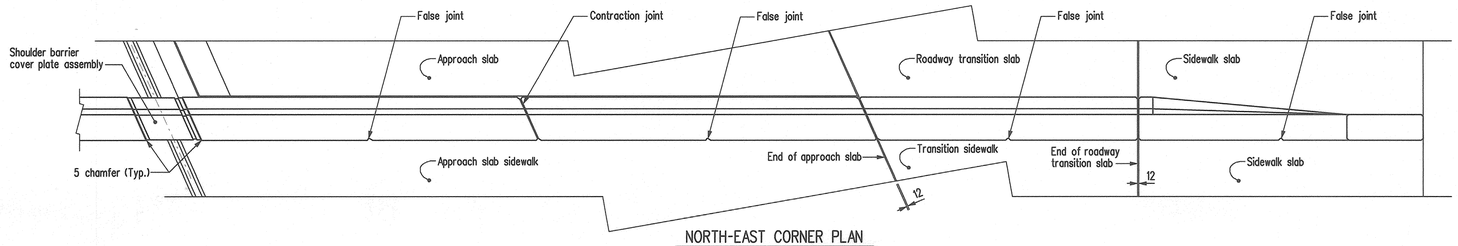

NORTH-EAST CORNER PLAN

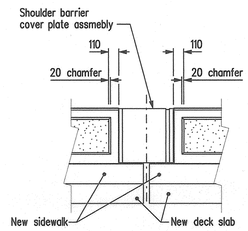

PIER 1 & 4 ELEVATION

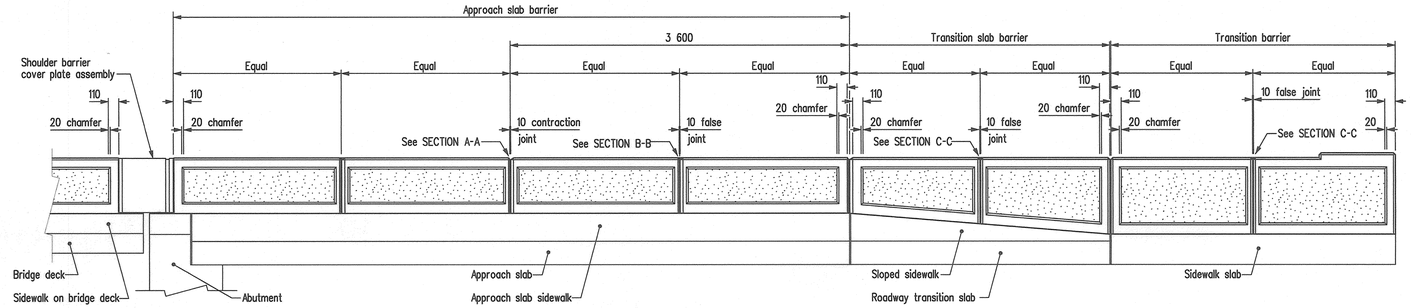

NORTH-EAST CORNER ELEVATION

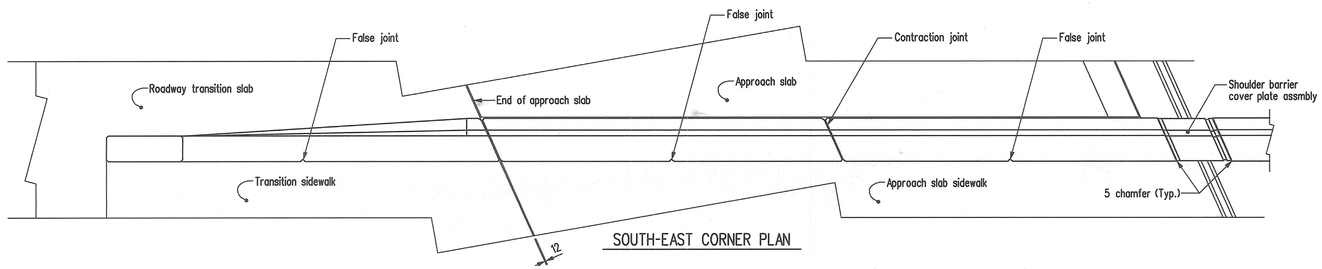

SOUTH-EAST CORNER PLAN

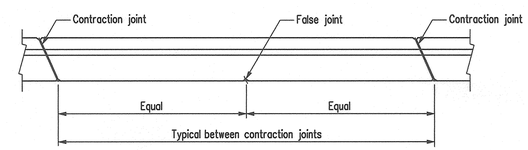

TYPICAL BETWEEN CONTRACTION JOINTS

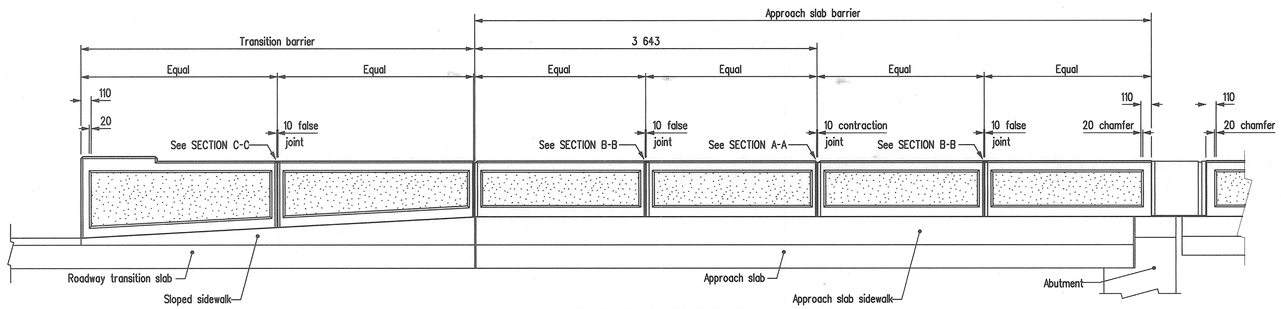

SOUTH-EAST CORNER ELEVATION

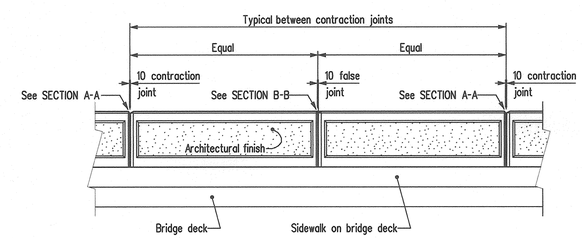

TYPICAL BETWEEN CONTRACTION JOINTS

DETAILS OF EAST SHOULDER BARRIER

NOTE:

For SECTION A-A, B-B and C-C see Sheet No. 100

REVISIONS		
DATE	BY	DESCRIPTION

PROVINCE OF MANITOBA
Mar 15/10
S.S
RIHAL
REGISTERED PROFESSIONAL ENGINEER

EAST SHOULDER BARRIER -STAGE 1 CONCRETE DETAILS

RECONSTRUCTION AND STRENGTHENING OF EXISTING BRIDGE
OVER ASSINIBOINE RIVER - CONTRACT THREE
ON P.T.H. No. 100 IN R.L.'S 72, 73 & 94
PARISH OF ST. CHARLES

CITY OF WINNIPEG

Manitoba
Infrastructure and Transportation
Water Control & Structures

RELEASED FOR CONSTRUCTION BY:
Ruth Bodem March 15/10
DIRECTOR DATE
STRUCTURAL DESIGN AND CONSTRUCTION BRANCH

DESIGN	BY: M.B.C.	SCALE: 1:30
	CHECKED: S.S.R.	SHEET No. 99
DETAILS	BY: D.P.W.	
	CHECKED: S.S.R./J.J.	SITE No. 2924-00

...\292400_shoulder_barrier.dgn 2010-03-12 3:27:02 PM