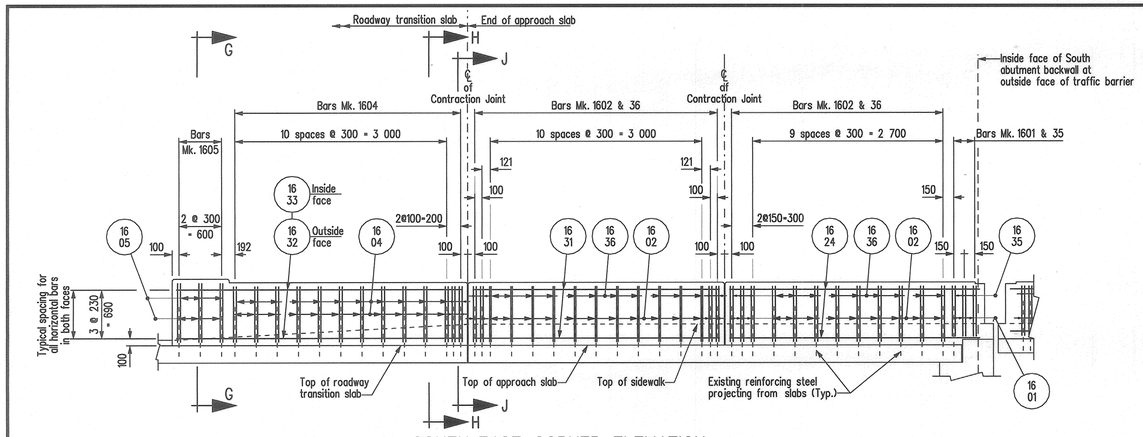

SOUTH-EAST CORNER ELEVATION

Showing reinforcing steel in both faces of shoulder barrier

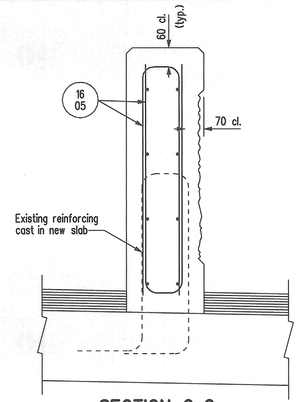

SECTION G-G

Showing reinforcing steel at end of transition barrier.
South-East corner shown. Others similar.
Scale 1 : 10

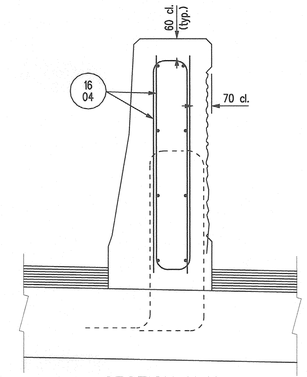

SECTION H-H

Showing reinforcing steel at transition section of transition barrier.
South-East corner shown. Others similar.
Scale 1 : 10

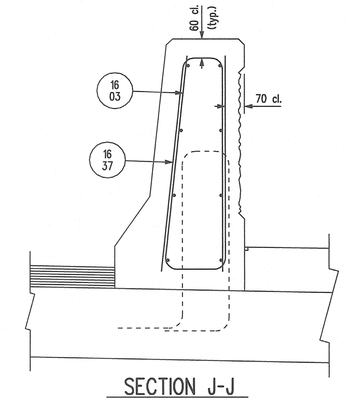

SECTION J-J

Showing reinforcing steel at start of transition barrier.
South-East corner shown. Others similar.
Scale 1 : 10

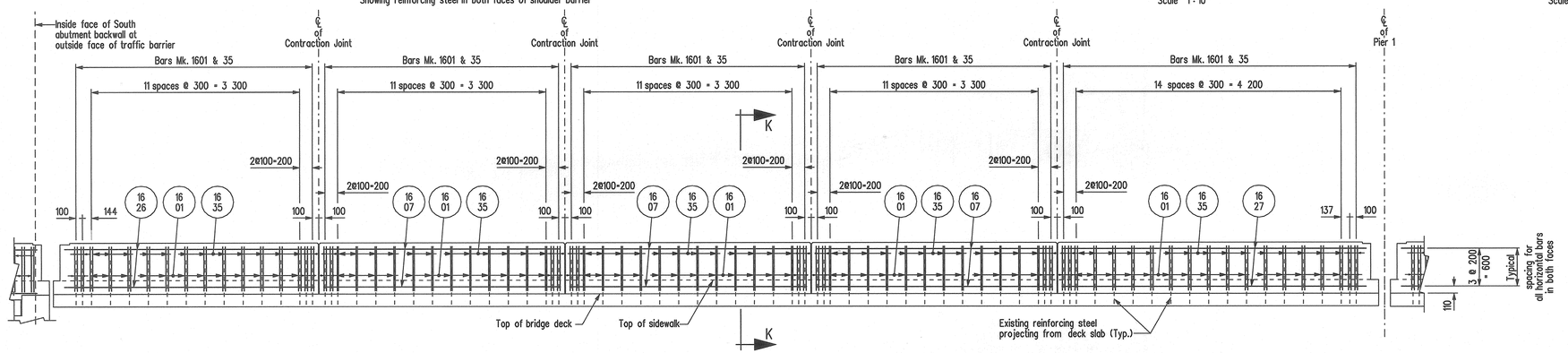

SOUTH ABUTMENT TO PIER 1 ELEVATION

Showing reinforcing steel in both faces of shoulder barrier

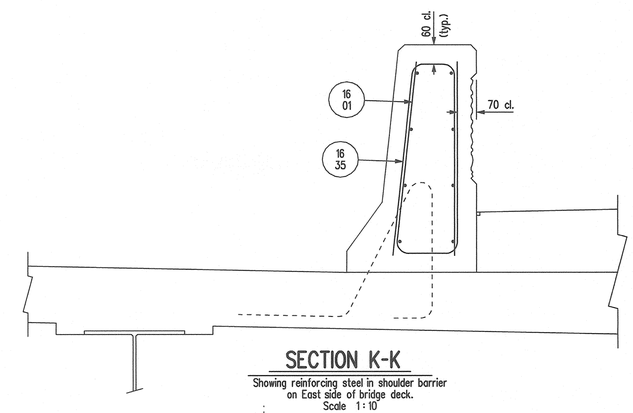

SECTION K-K

Showing reinforcing steel in shoulder barrier
on East side of bridge deck.
Scale 1 : 10

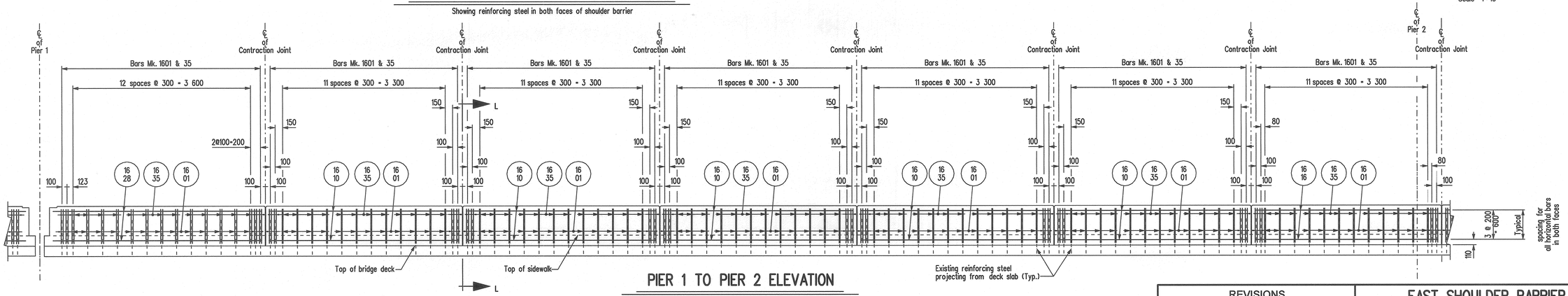

PIER 1 TO PIER 2 ELEVATION

Showing reinforcing steel in both faces of shoulder barrier

NOTE:

For SECTION L-L see Sheet No. 104

REVISIONS		
DATE	BY	DESCRIPTION

PROVINCE OF MANITOBA
Mar 15/10
S.S RIHAL
REGISTERED PROFESSIONAL ENGINEER

EAST SHOULDER BARRIER -STAGE 1 REINFORCING DETAILS

RECONSTRUCTION AND STRENGTHENING OF EXISTING BRIDGE
OVER ASSINIBOINE RIVER - CONTRACT THREE
ON P.T.H. No. 100 IN R.L.'S 72, 73 & 94
PARISH OF ST. CHARLES

CITY OF WINNIPEG

Manitoba
Infrastructure and Transportation
Water Control & Structures

RELEASED FOR CONSTRUCTION BY:
Keith Jaden March 15/10
DIRECTOR — DATE
STRUCTURES DESIGN AND CONSTRUCTION BRANCH

DESIGN	BY: M.B.C.	SCALE: 1 : 40 or As Shown	SHEET No. 101
	CHECKED: S.S.R.		
DETAILS	BY: D.P.W.		SITE No. 2924-00
	CHECKED: S.S.R./J.J.		

...\2924-00_shoulder_barrier_1.dgn 2010-03-12 4:28:27 PM