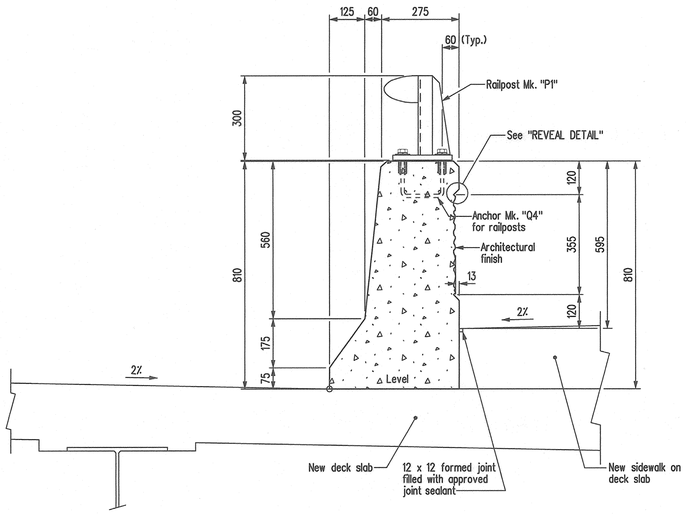

SECTION ON BRIDGE DECK

Showing East side shoulder barrier on bridge deck.
Scale 1 : 10

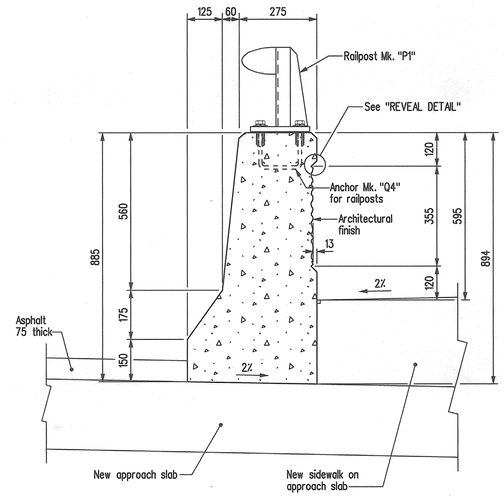

SECTION ON APPROACH SLAB

Showing East side shoulder barrier on approach slab.
Scale 1 : 10

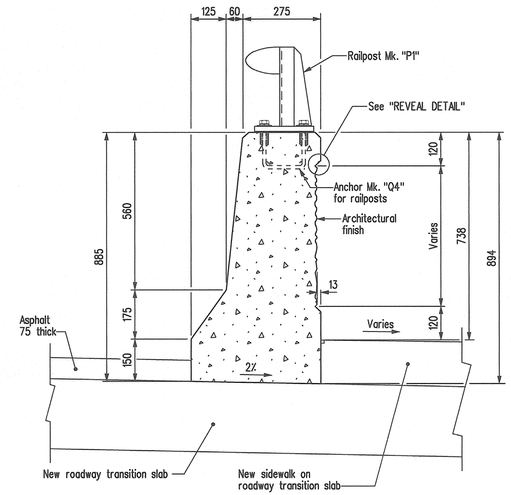

SECTION ON ROADWAY TRANSITION SLAB

Showing East side shoulder barrier on new roadway transition slab.
Scale 1 : 10

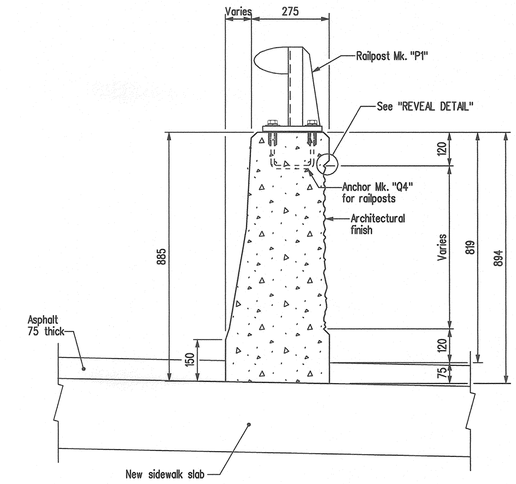

SECTION ON SIDEWALK SLAB

Showing East side transition barrier on new sidewalk slab.
Scale 1 : 10

NOTE:

Inserts Mk. "X4" to be placed in North-West and South-East transition barriers only.

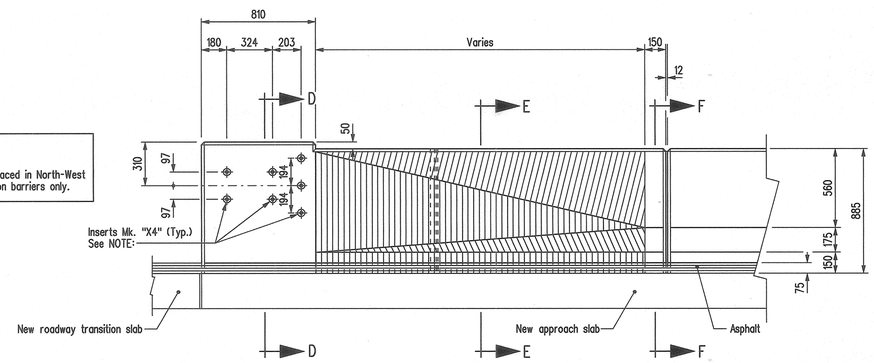

ELEVATION

Traffic side of South-West transition barrier shown.

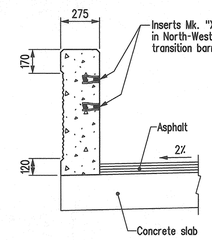

SECTION D-D

Aluminum railing not shown for clarity.

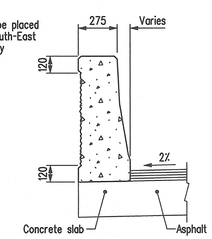

SECTION E-E

Aluminum railing not shown for clarity.

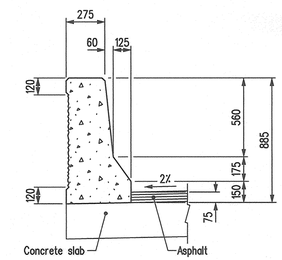

SECTION F-F

Aluminum railing not shown for clarity.

CONCRETE TRAFFIC BARRIER TRANSITION DETAILS

Showing traffic side of South-West corner transition barrier.
All other corners similar except as noted.
Scale 1 : 20

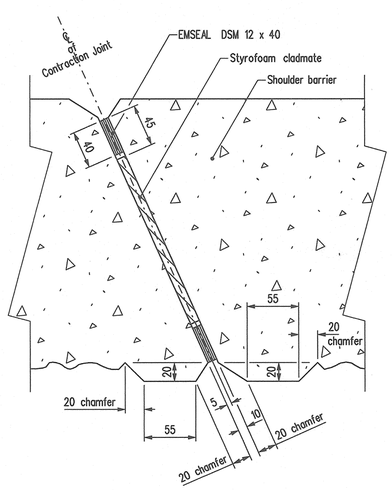

SECTION A-A

Typical at all contraction joints.
Scale 1 : 2

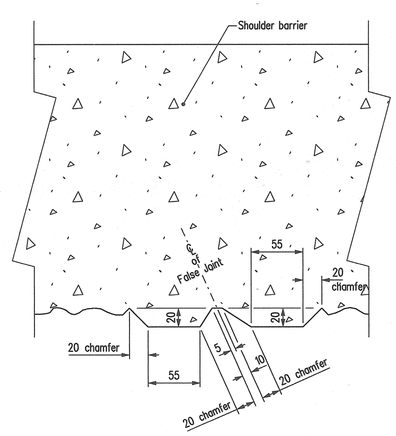

SECTION B-B

Typical at false joints between contraction joints and other skewed joints.
Scale 1 : 2

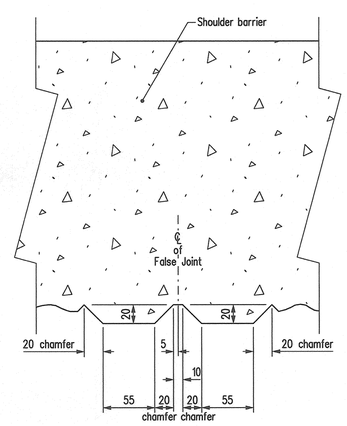

SECTION C-C

Typical at false joints at ends of shoulder barriers near square joints. See details.
Scale 1 : 2

NOTE:

1. For locations of SECTIONS A-A, B-B and C-C see Sheet No.99
2. All surfaces in contact with EMSEAL sealant shall be sandblasted before sealant installation.
3. EMSEAL to be supplied by the Contractor.
4. For Bill of inserts Mk. "X4" see Sheet No. 112

REVISIONS		
DATE	BY	DESCRIPTION

PROVINCE OF MANITOBA
Mar 15/10
S.S RIHAL
REGISTERED PROFESSIONAL ENGINEER

SHOULDER BARRIER -STAGE 1 & 2 CONCRETE DETAILS

RECONSTRUCTION AND STRENGTHENING OF EXISTING BRIDGE OVER ASSINIBOINE RIVER - CONTRACT THREE
ON P.T.H. No. 100 IN R.L.'S 72, 73 & 94
PARISH OF ST. CHARLES

CITY OF WINNIPEG

Manitoba
Infrastructure and Transportation
Water Control & Structures

RELEASED FOR CONSTRUCTION BY:
DIRECTOR — DATE
STRUCTURES, DESIGN AND CONSTRUCTION BRANCH

DESIGN	BY: M.B.C.	SCALE: As Shown
	CHECKED: S.S.R.	SHEET No. 100
DETAILS	BY: D.P.W.	
	CHECKED: S.S.R./J.J.	SITE No. 2924-00

...\292400_shoulder_barrier.dgn 2010-03-12 3:27:04 PM