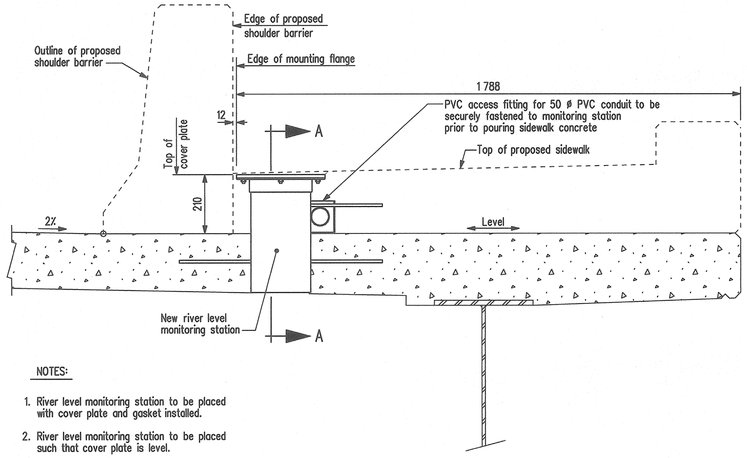

NOTES:

1. River level monitoring station to be placed with cover plate and gasket installed.
2. River level monitoring station to be placed such that cover plate is level.
3. For location of river level monitoring station see Sheet No. 56.

SECTION

Showing location of new river level monitoring station
Scale 1 : 10

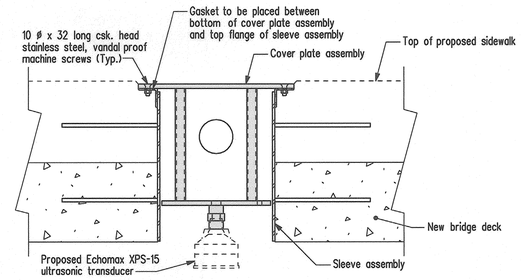

SECTION A-A

Showing assembly of new river level monitoring station
Scale 1 : 7.5

BILL OF MISCELLANEOUS METAL
FOR RIVER LEVEL MONITORING STATION

Site No. 2924-00

No.	DESCRIPTION	SIZE	COMPONENT MASS	TOTAL MASS
1	River level monitoring station			39.40
	To be fabricated from:			
	Cover plate	As detailed	19.407	
	Sleeve	As detailed	19.993	
				39.40

NOTE:
All steel components embedded in concrete shall be hot-dip galvanized.

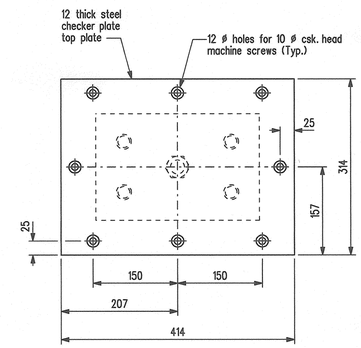

PLAN

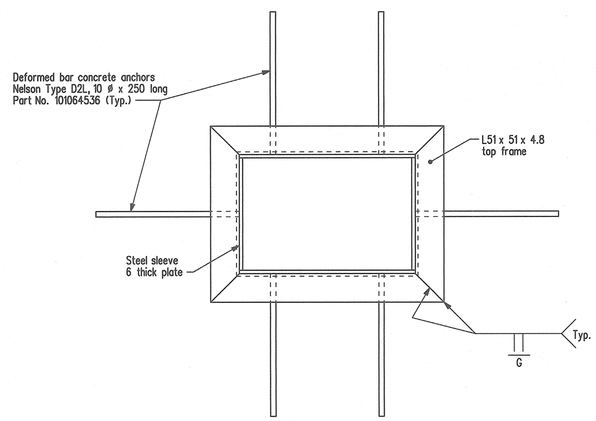

PLAN

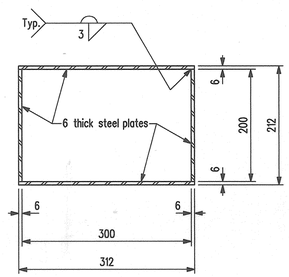

SECTION C-C

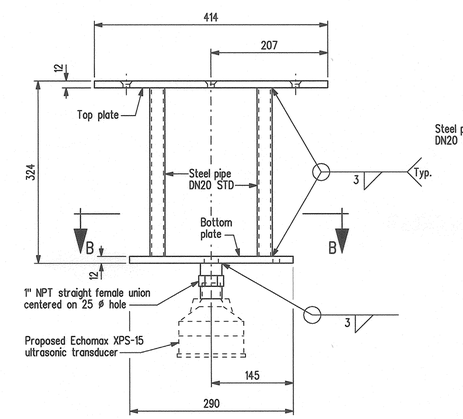

ELEVATION

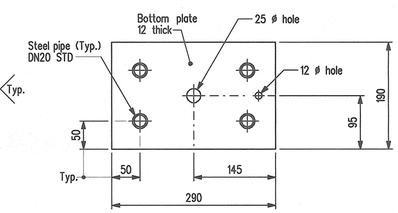

SECTION B-B

COVER PLATE DETAILS

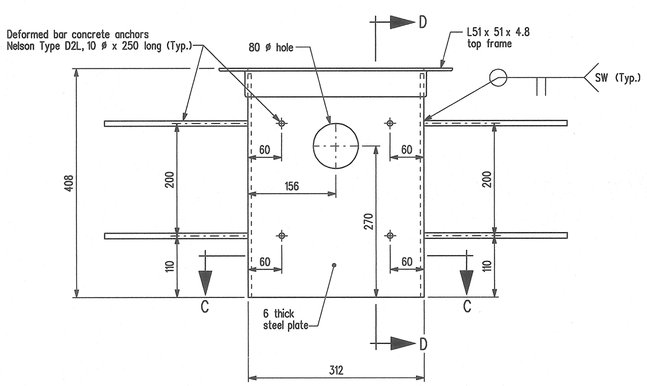

ELEVATION

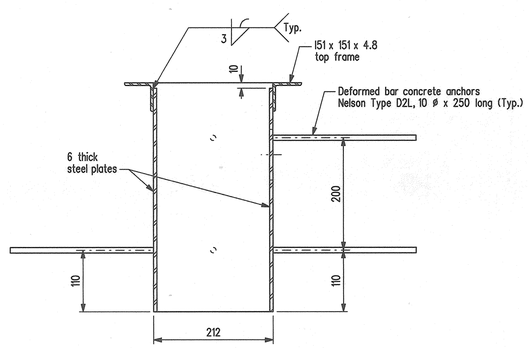

SECTION D-D

SLEEVE DETAILS

REVISIONS		
DATE	BY	DESCRIPTION

PROVINCE OF MANITOBA
Mar. 15/10
S.S. RIHAL
REGISTERED PROFESSIONAL ENGINEER

RIVER LEVEL MONITORING STATION DETAILS

RECONSTRUCTION AND STRENGTHENING OF EXISTING BRIDGE
OVER ASSINIBOINE RIVER - CONTRACT THREE
ON P.T.H. No. 100 IN R.L.'S 72, 73 & 94
PARISH OF ST. CHARLES

CITY OF WINNIPEG

Manitoba
Infrastructure and Transportation
Water Control & Structures

RELEASED FOR CONSTRUCTION BY:
DIRECTOR — DATE
STRUCTURES DESIGN AND CONSTRUCTION BRANCH

DESIGN	BY: M.B.C.	SCALE: 1 : 5 or As Shown
	CHECKED: S.S.R.	SHEET No. 97
DETAILS	BY: D.P.W.	
	CHECKED: S.S.R./J.J.	SITE No. 2924-00

...\292400contract3rehab.dgn 2010-03-10 9:49:16 AM