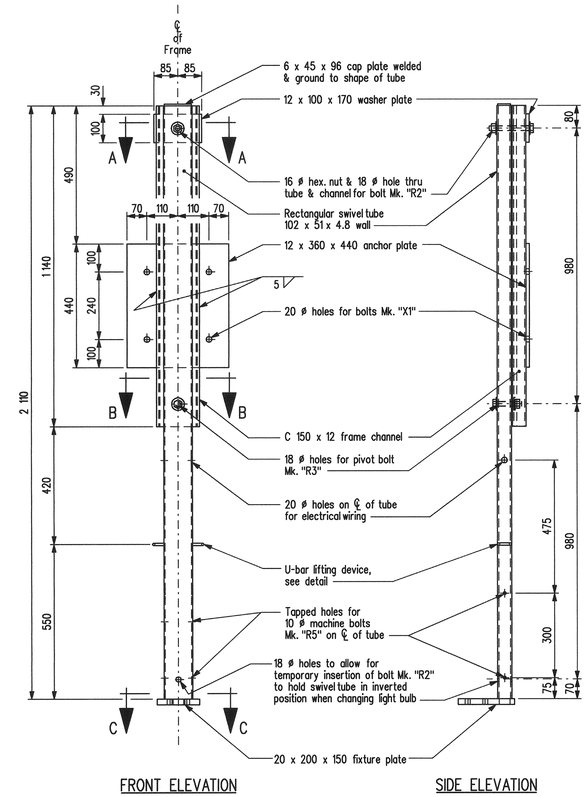

FRONT ELEVATION SIDE ELEVATION

LIGHT FIXTURE FRAME DETAILS

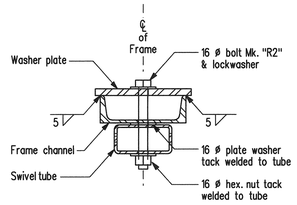

SECTION A-A

Scale 1 : 5

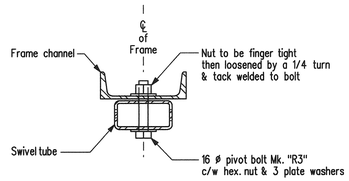

SECTION B-B

Scale 1 : 5

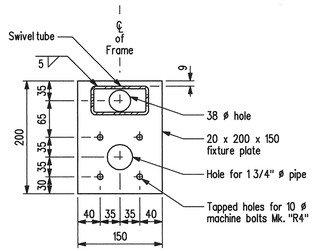

SECTION C-C

Scale 1 : 5

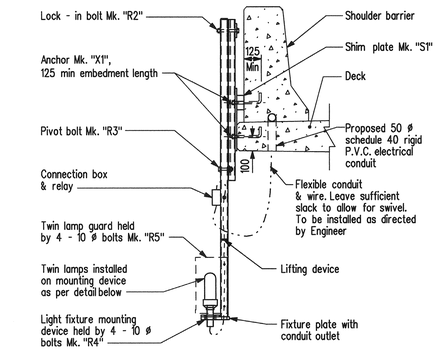

WEST SIDE

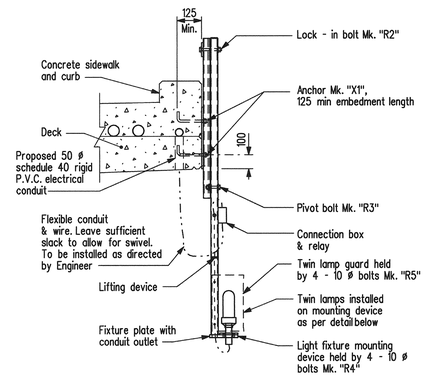

EAST SIDE

FRAME ASSEMBLY DETAILS

BILL OF MISCELLANEOUS METAL

FOR NAVIGATION LIGHTS

SITE No. 2924-00

MARK	No.	DESCRIPTION	SIZE	COMPONENT MASS	MASS PER UNIT	TOTAL MASS
	4	Light fixture frame - completely galvanized	as detailed			227.68
		Each unit to be fabricated from:				
		Swivel tube	1 Rectangular tube 102 x 51 x 4.8 x 2 110 long	21.73	21.73	
		Cover plate	1 Plate 6 x 45 x 96	0.20	0.20	
		Fixture plate	1 Plate 20 x 200 x 150	4.71	4.71	
		Lifting device	2 U-bars 8 ø x 100 long	0.04	0.08	
		Frame channel	1 - C150 x 12 x 1 140 long	13.68	13.68	
		Anchor plate	1 Plate 12 x 360 x 440	14.92	14.92	
		Washer plate	1 Plate 12 x 100 x 170	1.60	1.60	
					56.92	
	4	Twin lamp guard - completely galvanized	as detailed			45.20
		Each unit to be fabricated from:				
		Top angle frame	1 Angle 25 x 25 x 3 x 1 194 long	1.33	1.33	
		Bottom angle frame	1 Angle 25 x 25 x 3 x 1 190 long	1.21	1.21	
		Angle brackets	2 Angle 45 x 45 x 5 x 400 long	1.26	2.52	
		Handles	2 Round bars 10 ø x 256 long	0.20	0.40	
		Cover plate	1 Plate 5 x 170 x 450	3.00	3.00	
		Expanded metal mesh	1 Sheet 1/2 -13 F, 1 070 S.W.D.,			
			390 L.W.D. @ 6.8 kg/m²	2.84	2.84	
					11.30	
	4	Mounting Device	As detailed	1.97		7.88
R2	4	Lock - in bolt	Mach. bolt 16 ø x 140 long c/w hex. nut, 1 lock & 1 PL washer		0.33	1.32
R3	4	Pivot bolt	Mach. bolt 16 ø x 90 long c/w hex. nut & 3 plate washers		0.31	1.24
R4	16	Light fixture mounting bolt	Mach. bolt 10 ø x 32 long (no nut) c/w plate washer		0.03	0.48
R5	16	Lamp guard mounting bolt	Mach. bolt 10 ø x 25 long (no nut) c/w plate washer		0.03	0.48
S1	2	Shim plate - galvanized	As detailed		13.88	27.76
X1	16	Lamp guard Anchor Rod	Anchor rod 16 ø x 300 long c/w grade DH heavy hex nut,		0.41	6.56
			1 hardened washer and 1 lock washer			

Note: All miscellaneous metal inlcuding hardware shall be hot dip galvanized to a mininum weight of zinc coating of 600 g/m² TOTAL : 318.60 kg

BILL OF NAVIGATION LIGHTS

SITE No. 2924-00

MARK	No.	DESCRIPTION
	4	"APPLETON" Obstruction lights complete as follows:
		Cat. No. TVA 2490, 32 mm ø bottom hub, double fixture complete
		with clear Fresnel lenses
	4	Cat. No. FDC 32 RI Transfer Relays

NOTE:
1. Electrical cable shall be 10-2 Cabtyre, Type SOW cable (two (2) #10 wires and one (1) #10 ground wire). Supply all miscellaneous electrical hardware necessary for a proper installation including 90E cable fittings at junction boxes to prevent cable shearing.
2. Rigid steel conduit shall be 38 mm dia. sch.40 and 19 mm dia. shc.40 and shall be hot dip galvanized to a minimum weight of zinc coating of 600 g/m².

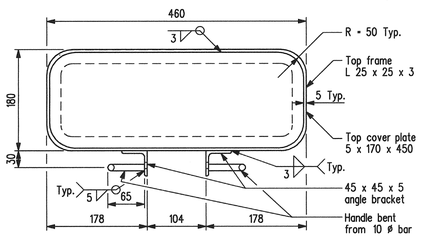

PLAN AT TOP

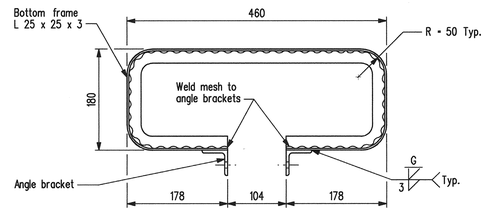

SECTION D-D

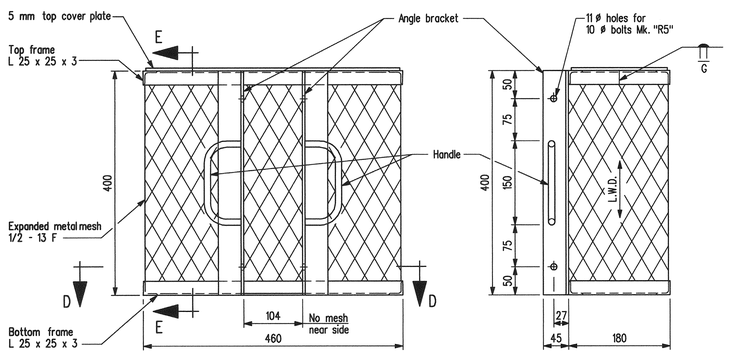

BACK ELEVATION SIDE ELEVATION

TWIN LAMP GUARD DETAILS

Scale: 1 : 5

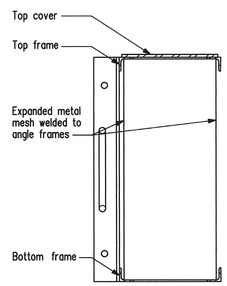

SECTION E-E

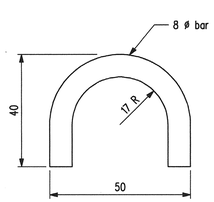

U-BAR LIFTING DEVICE

Scale: Full Size

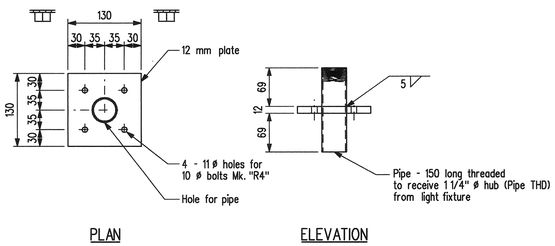

PLAN ELEVATION

LIGHT FIXTURE MOUNTING DEVICE

Scale: 1 : 5

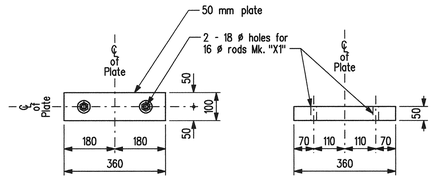

PLAN ELEVATION

SHIM PLATE Mk. "S1"

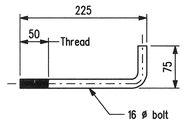

ANCHOR ROD Mk. "X1"

Scale: 1 : 5

GENERAL NOTES:

1. Contractor is to fabricate navigation light fixture frame & lamp guard. Light fixture to be supplied by the Contractor for a complete trial assembly before shipping to the Site.
2. All electrical wiring shall be done by the Contractor.
3. The Contractor shall supply all wire, conduit & required accessories.
4. All wiring & required accessories are to be in accordance with Manitoba Hydro requirements.
5. Location of navigation lights may be adjusted to suit rebar placement.
6. All bolts to be galvanized or cadmium plated.
7. For locations of navigation lights, see sheet No. 65

REVISIONS		
DATE	BY	DESCRIPTION

PROVINCE OF MANITOBA — W.C.D. DEGAGNE — 10-03-1 — REGISTERED PROFESSIONAL ENGINEER

NAVIGATION LIGHTS

RECONSTRUCTION AND STRENGTHENING OF EXISTING BRIDGE
OVER ASSINIBOINE RIVER - CONTRACT THREE
ON P.T.H. No. 100 IN R.L.'S 72, 73 & 94
PARISH OF ST. CHARLES

CITY OF WINNIPEG

Manitoba Infrastructure and Transportation
Water Control & Structures

RELEASED FOR CONSTRUCTION BY:
DIRECTOR — DATE
STRUCTURES DESIGN AND CONSTRUCTION BRANCH

DESIGN	BY: M.B.C.	SCALE: 1 : 10 or As Shown	SHEET No. 96
	CHECKED: S.S.R.		
DETAILS	BY: M.S.		SITE No. 2924-00
	CHECKED: S.S.R./W.C.D.		

...\292400_Navigation Lights_Contract3.dgn 2010-03-10 10:51:20 AM