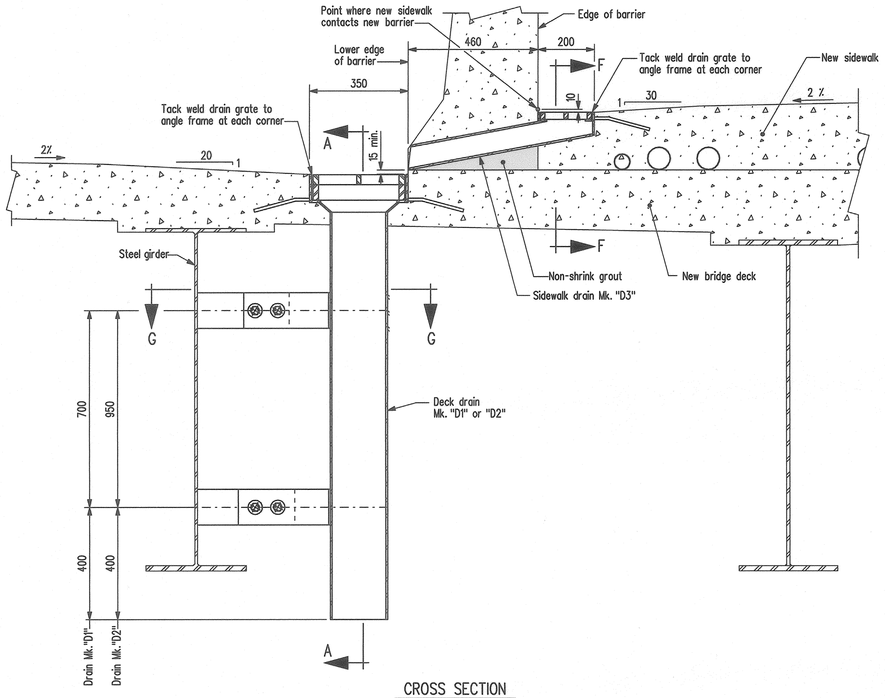

CROSS SECTION

Scale 1:10

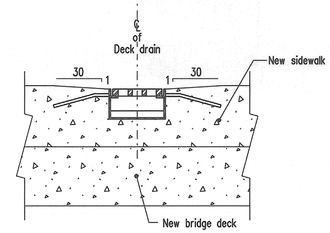

SECTION F-F

Scale 1:10

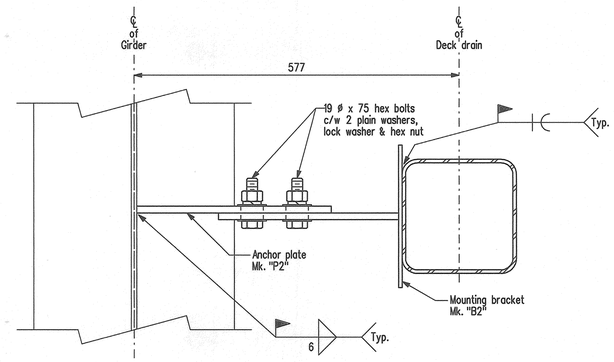

SECTION G-G

Scale 1:5

ERECTION DETAILS FOR WEST SIDE DRAINS

BILL OF MISCELLANEOUS METAL
FOR DECK AND SIDEWALK DRAINS

Site No. 2924-00

MARK	No.	DESCRIPTION	SIZE	COMPONENT MASS	TOTAL MASS
B1	12	Mounting bracket	As detailed (completely galvanized)	4.180	50.16
B2	12	Mounting bracket	As detailed (completely galvanized)	5.201	62.41
D1	8	Deck drains	As detailed (completely galvanized)	46.529	372.23
D2	4	Deck drains	As detailed (completely galvanized)	56.129	224.52
D3	6	Sidewalk drains	As detailed (completely galvanized)	16.002	96.01
	12	Deck grates	As detailed (completely galvanized)	21.770	130.62
	6	Sidewalk grates	As detailed (completely galvanized)	3.228	19.37
P1	12	Anchor plate	As detailed (completely galvanized)	2.341	28.09
P2	12	Anchor plate	As detailed (completely galvanized)	3.981	47.77
	48	Hex. bolts	19 ø x 75 long c/w 2 plain washers,		
			1 lock washer & 1 hex. nut (all galvanized)	0.409	19.63
				Total	1 050.81 kg

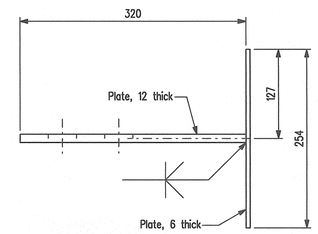

PLAN

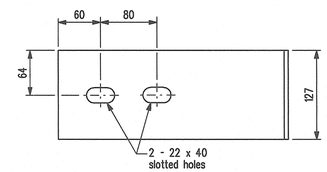

ELEVATION

DETAILS OF MOUNTING BRACKET Mk. "B2"

Scale 1:4

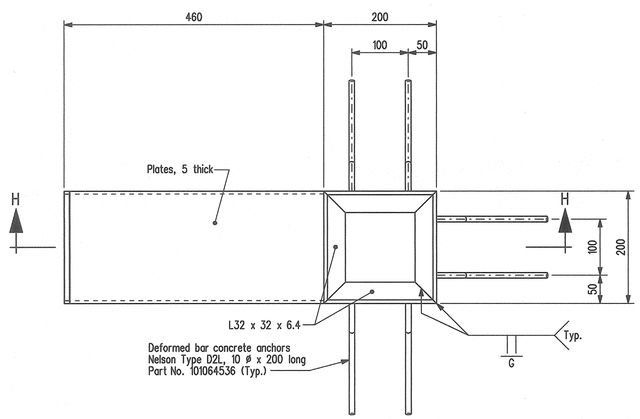

PLAN

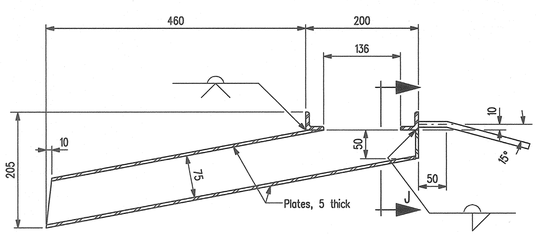

SECTION H-H

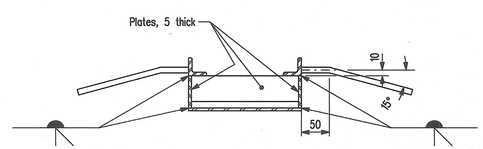

SECTION J-J

DETAILS OF SIDEWALK DRAINS Mk. "D3"

Scale 1:5

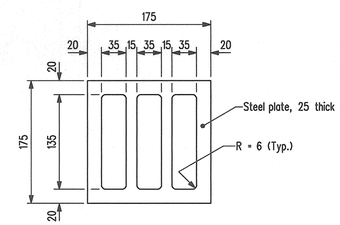

DETAILS OF SIDEWALK DRAIN GRATE

Scale 1:4

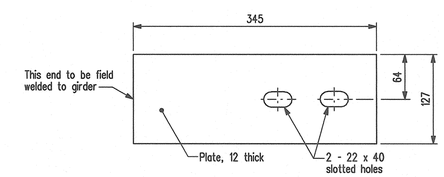

DETAILS OFANCHOR PLATE Mk. "P2"

Scale 1:4

NOTES:

1. Apply Galvalloy to all field welds and areas where galvanizing has been damaged.
2. Seal all welds prior to galvanizing.
3. For locations of deck and sidewalk drains see Sheet No. 63

REVISIONS		
DATE	BY	DESCRIPTION

PROVINCE OF MANITOBA
Mar 15/10
S.S RIHAL
REGISTERED PROFESSIONAL ENGINEER

DECK DRAIN DETAILS

RECONSTRUCTION AND STRENGTHENING OF EXISTING BRIDGE OVER ASSINIBOINE RIVER - CONTRACT THREE ON P.T.H. No. 100 IN R.L.'S 72, 73 & 94 PARISH OF ST. CHARLES

CITY OF WINNIPEG

Manitoba Infrastructure and Transportation

Water Control & Structures

RELEASED FOR CONSTRUCTION BY:

Ruth Yoden March 15/10
DIRECTOR DATE
STRUCTURES, DESIGN AND CONSTRUCTION BRANCH

DESIGN	BY: M.B.C.	SCALE: As Shown
	CHECKED: S.S.R.	SHEET No. 90
DETAILS	BY: D.P.W.	
	CHECKED: S.S.R./J.J.	SITE No. 2924-00

...\292400contract3rehab.dgn 2010-03-10 1:55:20 PM