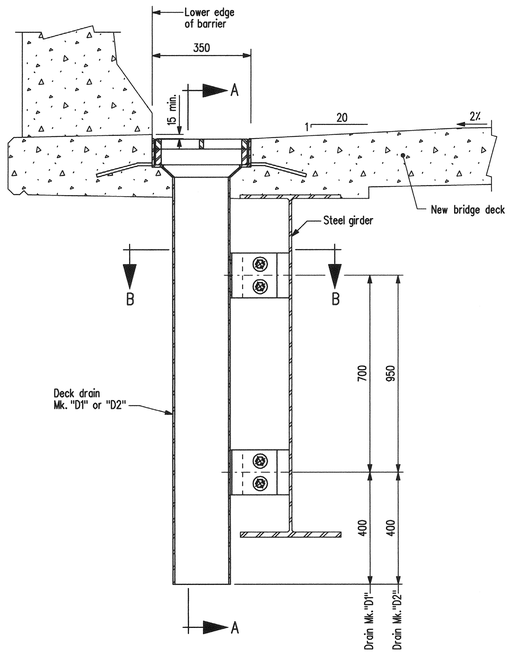

CROSS SECTION

Scale 1 : 10

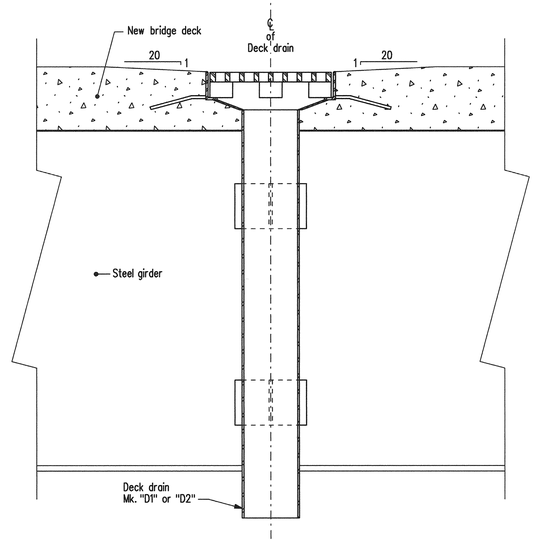

SECTION A-A

Scale 1 : 10

ERECTION DETAILS FOR EAST SIDE DRAINS

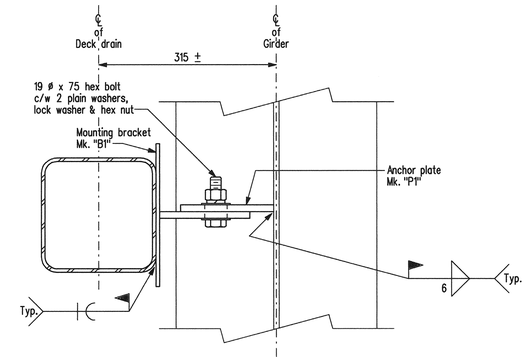

SECTION B-B

Scale 1 : 5

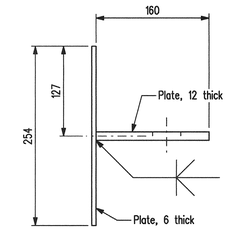

PLAN

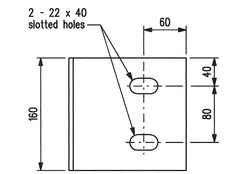

ELEVATION

DETAILS OF MOUNTING BRACKET Mk. "B1"

Scale 1 : 4

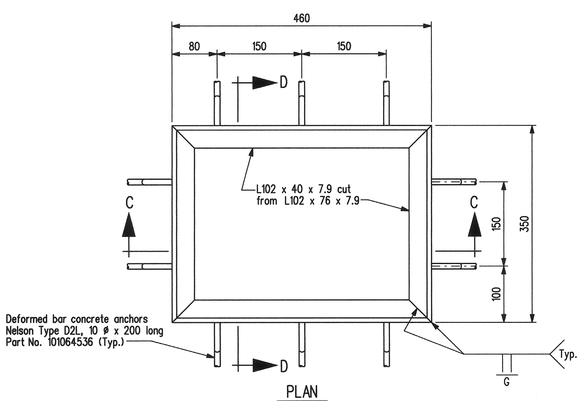

PLAN

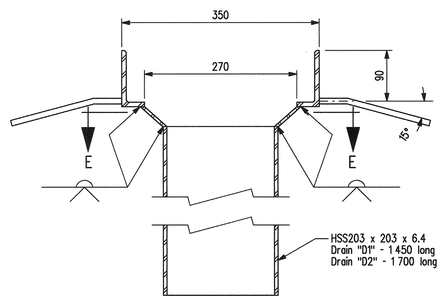

SECTION D-D

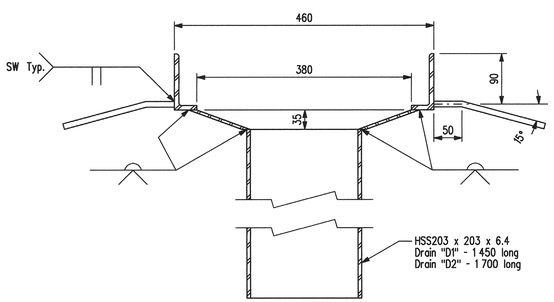

SECTION C-C

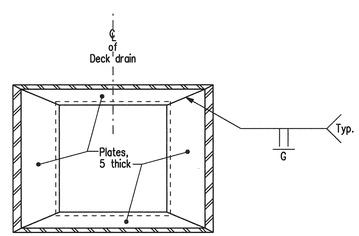

SECTION E-E

DETAILS OF DECK DRAINS Mk. "D1" & "D2"

Scale 1 : 5

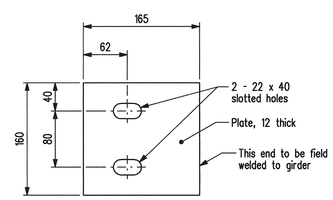

DETAILS OFANCHOR PLATE Mk. "P1"

Scale 1 : 4

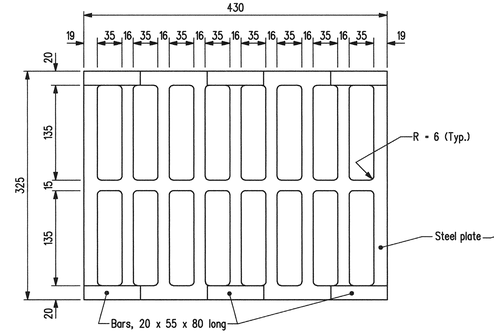

PLAN

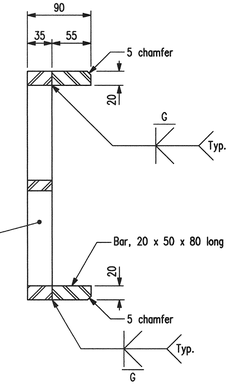

SECTION

DETAILS OF DECK DRAIN GRATE

Scale 1 : 4

REVISIONS		
DATE	BY	DESCRIPTION

PROVINCE OF MANITOBA
Mar 15/10
S.S RIHAL
REGISTERED PROFESSIONAL ENGINEER

DECK DRAIN DETAILS

RECONSTRUCTION AND STRENGTHENING OF EXISTING BRIDGE
OVER ASSINIBOINE RIVER - CONTRACT THREE
ON P.T.H. No. 100 IN R.L.'S 72, 73 & 94
PARISH OF ST. CHARLES

CITY OF WINNIPEG

Manitoba
Infrastructure and Transportation
Water Control & Structures

RELEASED FOR CONSTRUCTION BY:
Ruth Eden March 15/10
DIRECTOR DATE
STRUCTURES, DESIGN AND CONSTRUCTION BRANCH

DESIGN	BY: M.B.C.	SCALE: As Shown
	CHECKED: S.S.R.	SHEET No. 89
DETAILS	BY: D.P.W.	
	CHECKED: S.S.R.\J.J.	SITE No. 2924-00

...\292400contract3rehab.dgn 2010-03-10 1:54:47 PM