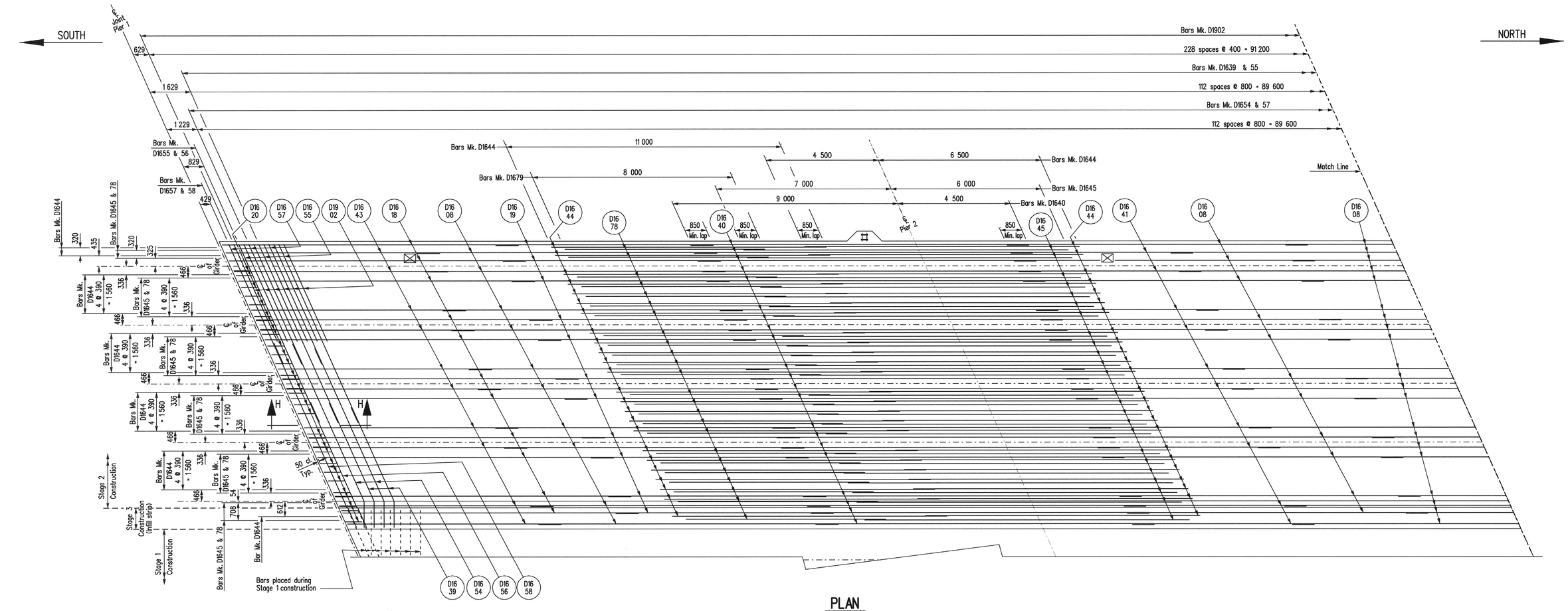

PLAN

Showing reinforcing steel in TOP of slab
Stage 2 & 3
Pier 1 to Pier 4.

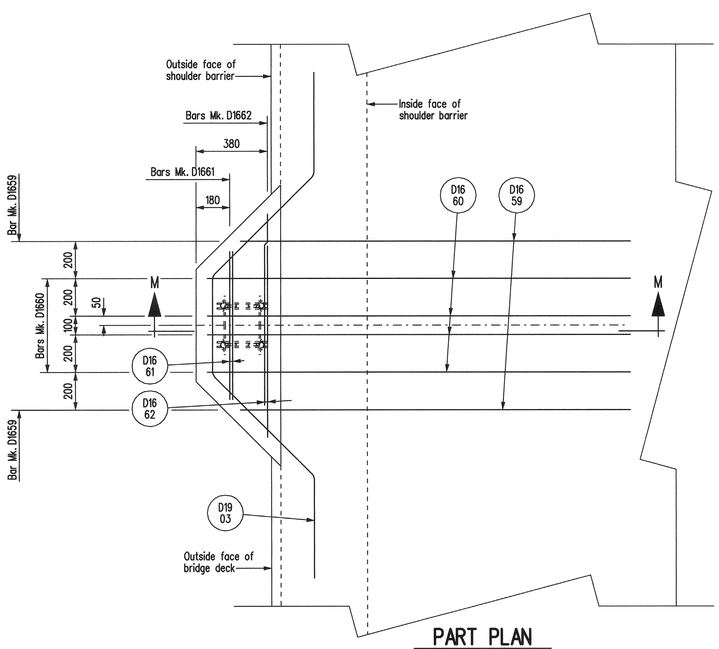

PART PLAN

Showing additional reinforcing bars required at West lamp standards.
Sidewalk, barrier and deck reinforcing not shown.
Electrical conduit not shown.
Scale 1 : 15

NOTES:

1. 60 cl. cover to reinforcing unless noted otherwise.
2. See MINIMUM LAP SPLICES table for required reinforcing lap lengths.
3. Transverse bars may be shifted slightly as required to clear existing channel shear connectors on girder top flange.
4. Longitudinal bars may be shifted slightly as required to clear roadway unit mounting brackets.
5. Reinforcing bars may be shifted slightly or cut to clear new deck drains, subject to engineer's approval.
6. For SECTION H-H see Sheet No. 84
7. For PART PLAN showing additional transverse reinforcing in bottom of deck haunches see Sheet No. 74
8. For Line Diagram showing similar layout of longitudinal bars see Sheet No. 72
9. This sheet to be read in conjunction with sheet No. 87

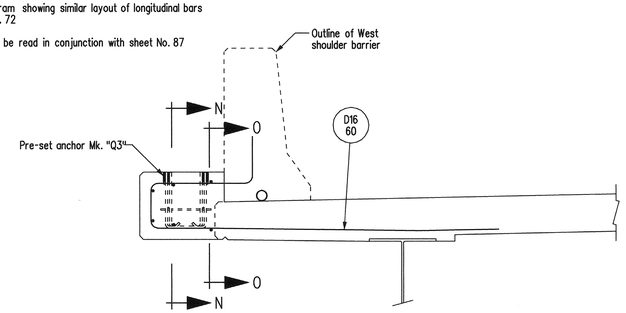

SECTION M-M

Showing additional reinforcing bars required at West lamp standards.
Sidewalk, barrier and deck reinforcing not shown.
Scale 1 : 15

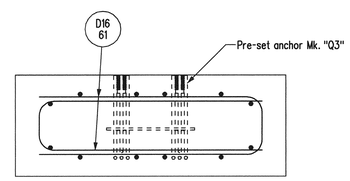

SECTION N-N

Showing additional reinforcing bars required at West lamp standards.
Sidewalk, barrier and deck reinforcing not shown.
Scale 1 : 10

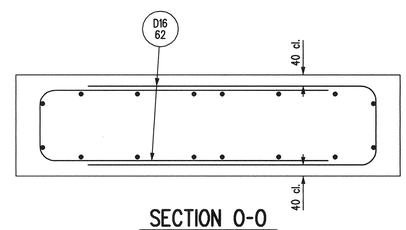

SECTION O-O

Showing additional reinforcing bars required at West lamp standards.
Sidewalk, barrier and deck reinforcing not shown.
Scale 1 : 10

REVISIONS		
DATE	BY	DESCRIPTION

PROVINCE OF MANITOBA
Mar 15/10
S.S
RIHAL
REGISTERED PROFESSIONAL ENGINEER

DECK REPLACEMENT - STAGE 2 & 3 - DECK REINFORCING DETAILS FOR PIER 1 TO PIER 4

RECONSTRUCTION AND STRENGTHENING OF EXISTING BRIDGE
OVER ASSINIBOINE RIVER - CONTRACT THREE
ON P.T.H. No. 100 IN R.L.'S 72, 73 & 94
PARISH OF ST. CHARLES

CITY OF WINNIPEG

Manitoba
Infrastructure and Transportation
Water Control & Structures

RELEASED FOR CONSTRUCTION BY:
Keith Edem March 15/10
DIRECTOR DATE
STRUCTURES DESIGN AND CONSTRUCTION BRANCH

DESIGN	BY: M.B.C.	SCALE: 1 : 75
	CHECKED: S.S.R.	SHEET No. 86
DETAILS	BY: D.P.W.	
	CHECKED: S.S.R./J.J.	SITE No. 2924-00

...\292400_Deck Reinforcing_Contract 3.dgn 2010-03-10 9:56:18 AM