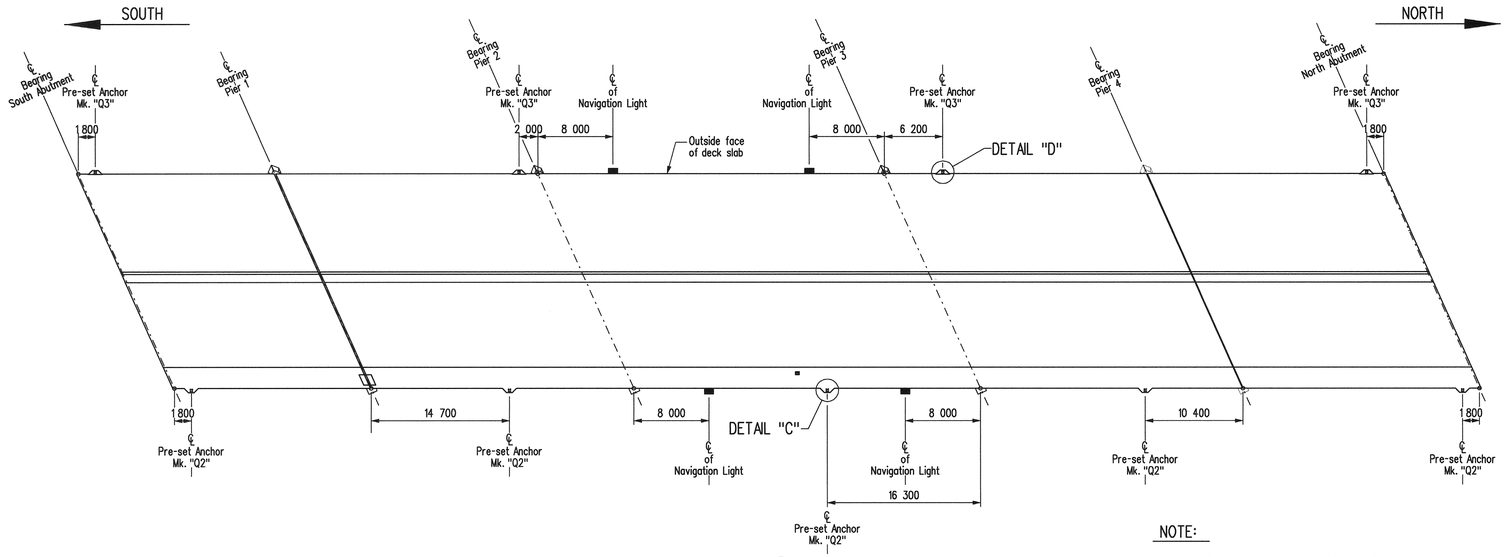

PLAN

Showing locations of lamp standard anchors on bridge deck.
Scale 1:300

NOTE:

1. For anchoring detials for Navigation Lights see Sheet No. 96

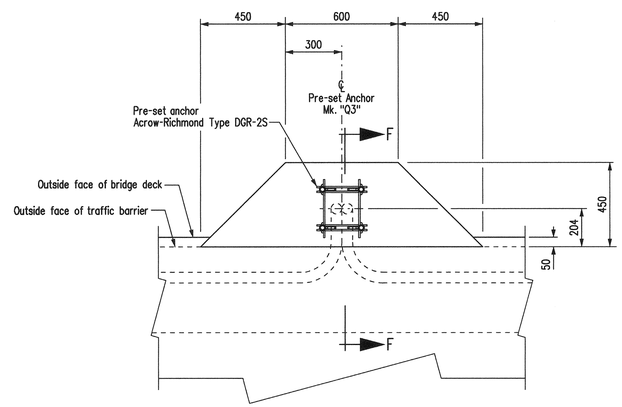

DETAIL "D"

Showing lamp standard base on West side of bridge deck.
Scale 1:15

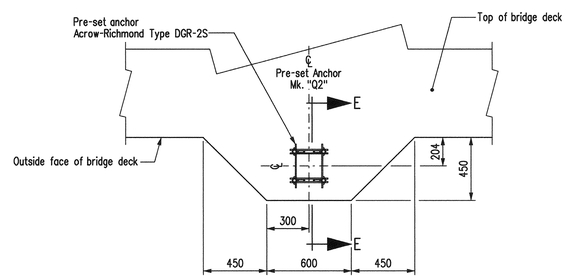

DETAIL "C"

Showing lamp standard base on East side of bridge deck.
Scale 1:15

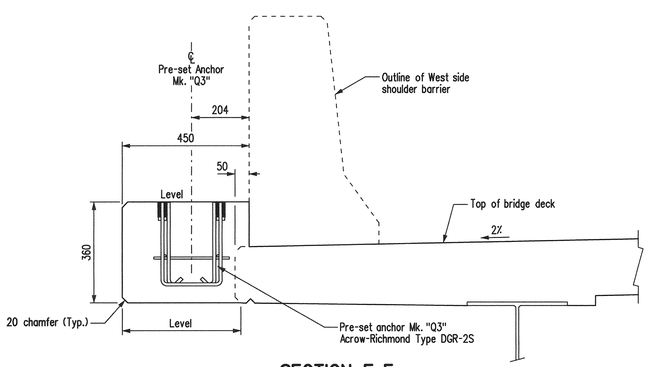

SECTION F-F

Showing lamp standard base on West side of bridge deck.
Scale 1:10

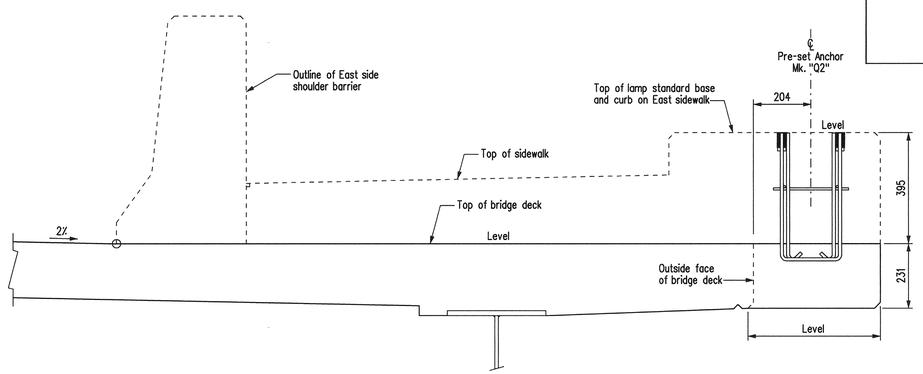

SECTION E-E

Showing lamp standard base on East side of bridge deck.
Scale 1:10

BILL OF MISCELLANEOUS METAL

FOR PEDESTRIAN RAILPOST ANCHORS AND LAMP STANDARD ANCHORS

Site No. 2924-00

MARK	No.	DESCRIPTION		UNIT MASS	TOTAL MASS
Q1	81	Pre-set anchors	Acrow-Richmond Type DGR-1 or equivalent for pedestrian railposts (as detailed)	2.922	236.68
			c/w 4 machine bolts A307, 19 ø x 70 long with plate and		
			lock washers - completely galvanized		
Q2	5	Pre-set anchors	Acrow-Richmond Type DGR-2FS or equivalent for lamp standards, completely	8.700	43.50
			galvanized (as detailed) c/w 4 square headed studs ASTM Type 304 or Type 316		
			stainless steel, eight nuts (stainless steel) and eight plate washers (stainless steel)		
Q3	4	Pre-set anchors	Acrow-Richmond Type DGR-2FS or equivalent for lamp standards, completely	8.700	34.80
			galvanized (as detailed) c/w 4 square headed studs ASTM Type 304 or Type 316		
			stainless steel, eight nuts (stainless steel) and eight plate washers (stainless steel)		
					Total Mass - 314.98 kg

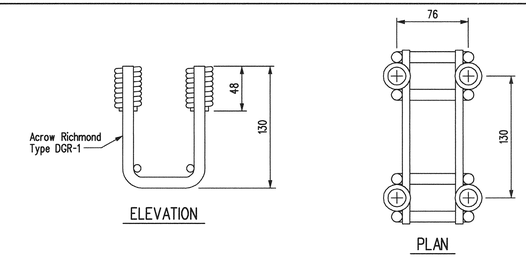

PRE-SET ANCHOR Mk. "Q1"

Scale 1:3

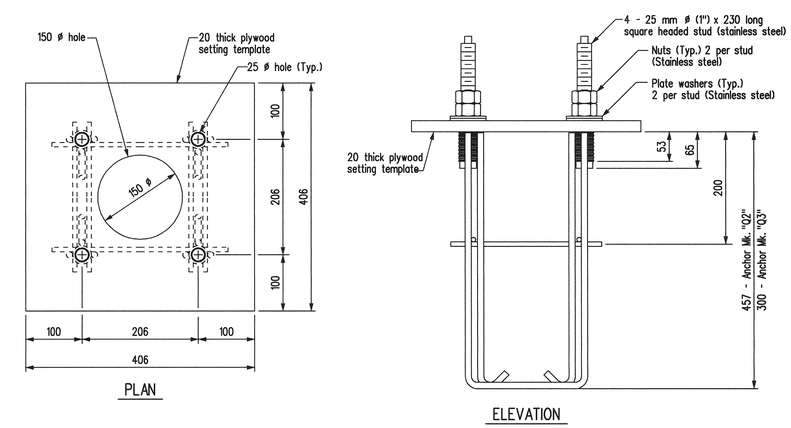

PRE-SET ANCHORS Mk. "Q2" & "Q3"

Scale 1:5

REVISIONS		
DATE	BY	DESCRIPTION

PROVINCE OF MANITOBA
Mar. 5/10
S.S. RIHAL
REGISTERED PROFESSIONAL ENGINEER

DECK REPLACEMENT - STAGE 1, 2 & 3 CONCRETE DETAILS

RECONSTRUCTION AND STRENGTHENING OF EXISTING BRIDGE
OVER ASSINIBOINE RIVER - CONTRACT THREE
ON P.T.H. No. 100 IN R.L.'S 72, 73 & 94
PARISH OF ST. CHARLES

CITY OF WINNIPEG

Manitoba
Infrastructure and Transportation
Water Control & Structures

RELEASED FOR CONSTRUCTION BY:
Ruth Jeden March 15/10
DIRECTOR — DATE
STRUCTURES DESIGN AND CONSTRUCTION BRANCH

DESIGN	BY: M.B.C.	
	CHECKED: S.S.R.	
DETAILS	BY: D.P.W.	
	CHECKED: S.S.R./J.J.	

SCALE: As Shown
SHEET No. 65
SITE No. 2924-00

...\292400contract3rehab.dgn 2010-03-10 8:36:19 AM