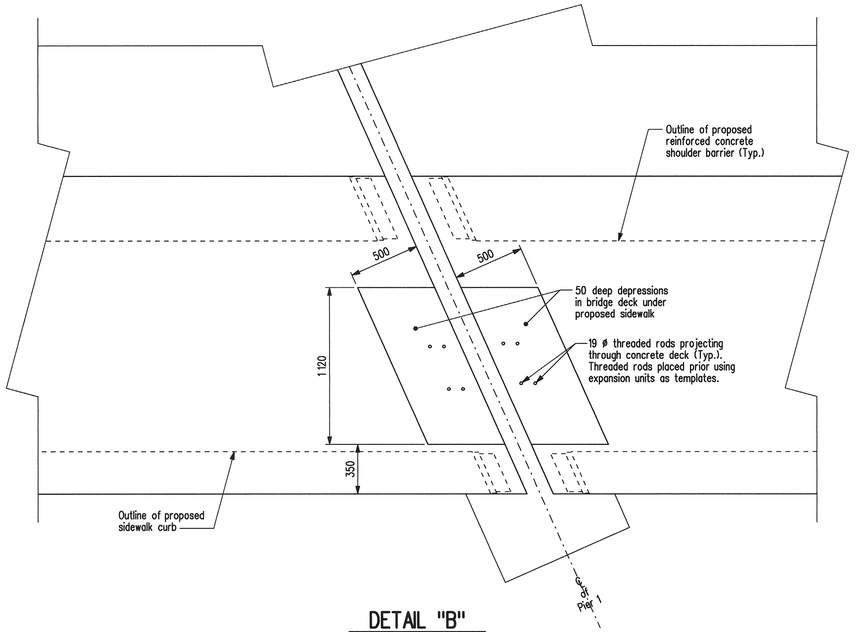

DETAIL "B"

Showing depressions to be cast into bridge deck at Pier 1.
Scale 1 : 20

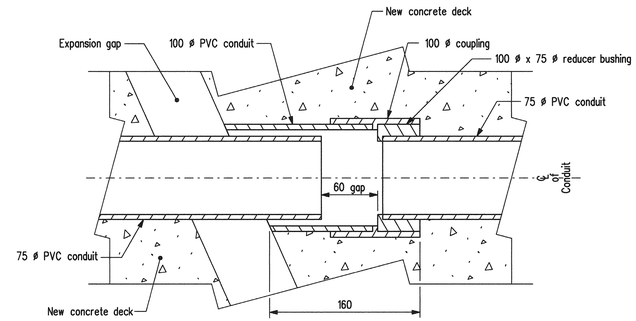

PART PLAN

Showing details of 75 ø M.T.S. conduits at piers.
Joints at abutments similar.
Scale 1 : 3

BILL OF MISCELLANEOUS MATERIAL FOR CONDUITS

FOR STAGE 1 & STAGE 2 FIXED JOINTS AND EXPANSION JOINTS

Site No. 2924-00

No.	DESCRIPTION	REMARKS
1	Conduit	Royal Rigid PVC Conduit, 100 ø x 3 050 long, field cut to fit (see details)
2	Conduit	Royal Rigid PVC Conduit, 63 ø x 3 050 long, field cut to fit (see details)
16	Reducer bushing	100 ø - 75 ø, Royal Part No. R1813
12	Reducer bushing	63 ø - 50 ø, Royal Part No. R1811
16	Coupling	For 100 ø Rigid PVC conduit, Royal Part No. REC-55
12	Coupling	For 63 ø Rigid PVC conduit, Royal Part No. REC-40
1	Access fitting	Type LB for 50 ø Rigid PVC conduit (See river level monitoring station details) -
		Royal Part No. RFSLB60S

NOTE: All material in the above Bill to be supplied by the Bridge Contractor.

NOTES:

1. All PVC conduits to be supplied by the Contractor.
2. All PVC conduit shall be securely fastened at 1 500 mm intervals.

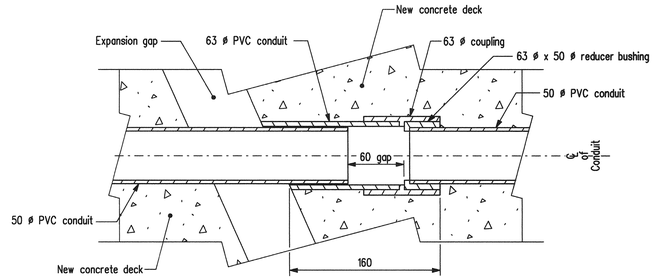

PART PLAN

Showing details of 50 ø electrical conduit at piers.
Joints at abutments similar.
Scale 1 : 3

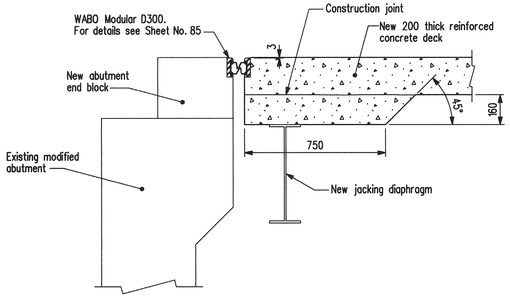

SECTION B-B

Showing limits of new deck haunch at South abutment.
North abutment similar but opposite.

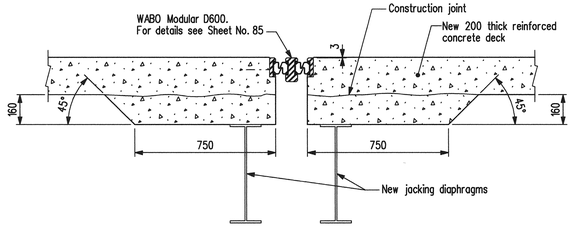

SECTION C-C

Showing limits of new deck haunches at Pier 1.

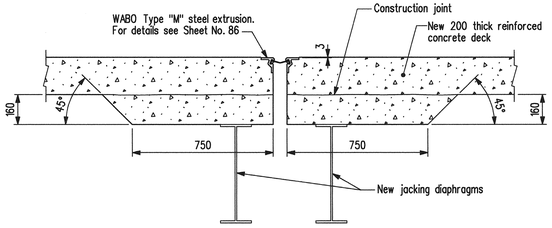

SECTION D-D

Showing limits of new deck haunches at Pier 4.

NOTES:

1. For locations of SECTIONS B-B, C-C & D-D see Sheet No. 63
2. For locations of DETAIL "B" and DETAIL "C" see Sheet No. 63

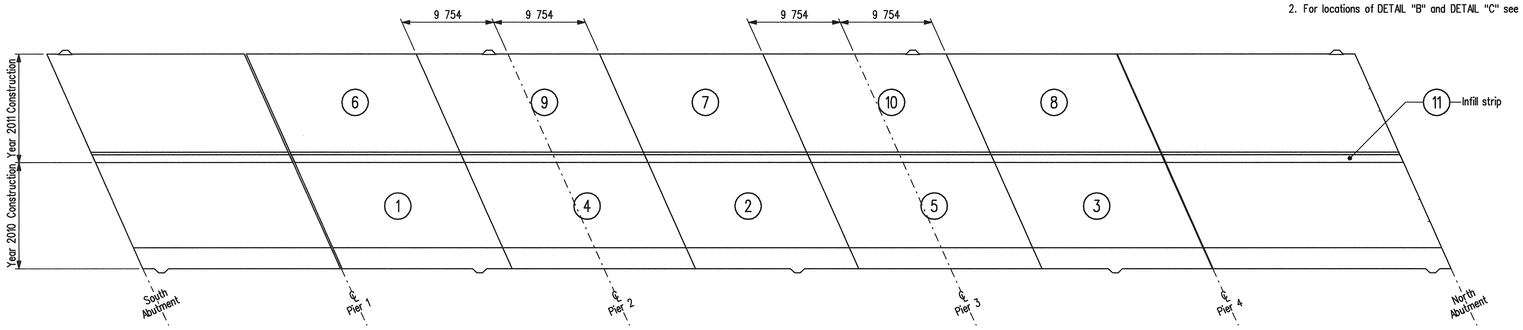

PLAN

Showing deck concrete pour sequence for continuous span.
Scale 1 : 300

REVISIONS		
DATE	BY	DESCRIPTION

PROVINCE OF MANITOBA
Mar. 15/10
S.S. RIHAL
REGISTERED PROFESSIONAL ENGINEER

DECK REPLACEMENT - STAGE 1, 2 & 3
CONCRETE DETAILS

RECONSTRUCTION AND STRENGTHENING OF EXISTING BRIDGE
OVER ASSINIBOINE RIVER - CONTRACT THREE
ON P.T.H. No. 100 IN R.L.'S 72, 73 & 94
PARISH OF ST. CHARLES

CITY OF WINNIPEG

Manitoba
Infrastructure and Transportation
Water Control & Structures

RELEASED FOR CONSTRUCTION BY:
Ruth Soden March 15/10
DIRECTOR DATE
STRUCTURES DESIGN AND CONSTRUCTION BRANCH

DESIGN	BY: M.B.C.	SCALE: 1 : 15 or As Shown
	CHECKED: S.S.R.	SHEET No. 64
DETAILS	BY: D.P.W.	
	CHECKED: S.S.R./J.J.	SITE No. 2924-00

...\292400contract3rehab.dgn 2010-03-10 9:40:23 AM