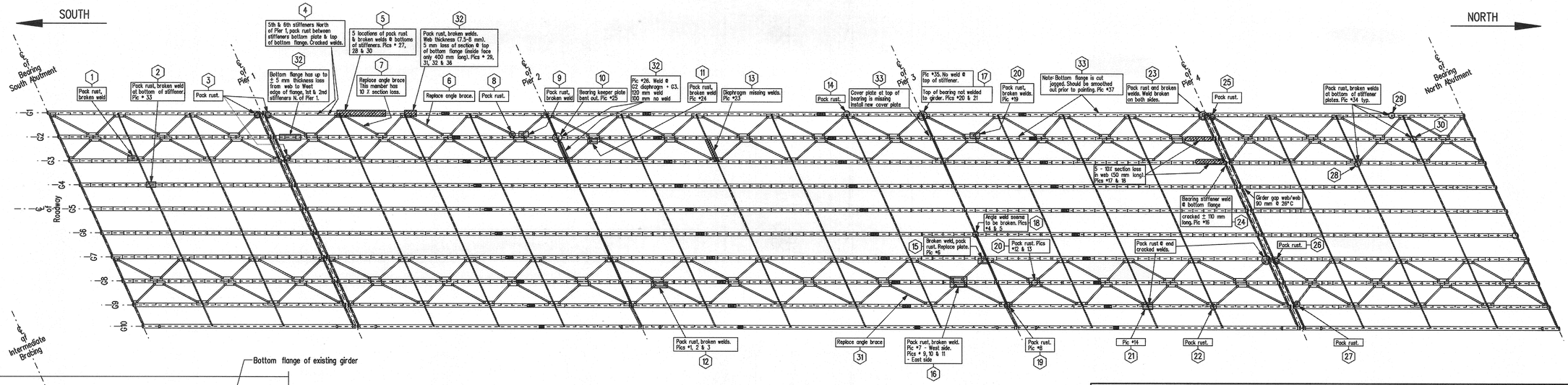

PLAN

Showing miscellaneous structural steel repairs

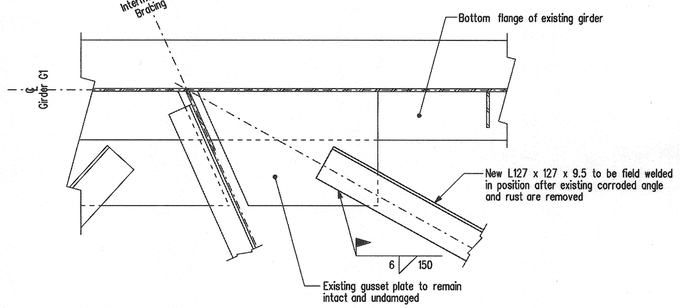

DETAIL "A"

Showing new angle brace weld details
Scale 1 : 10

See Note 6

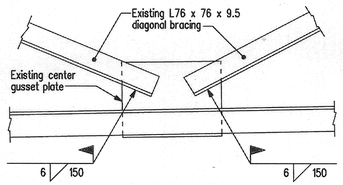

DETAIL "B"

Showing missing welds to be added
Scale 1 : 10

See Note 13

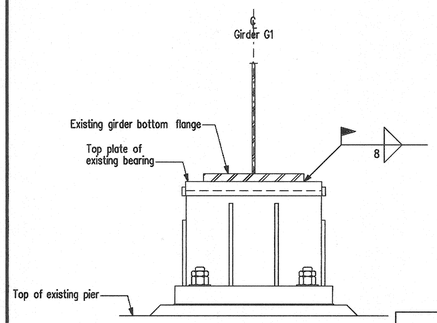

DETAIL "C"

Showing missing welds to be added
Scale 1 : 10

See Note 17

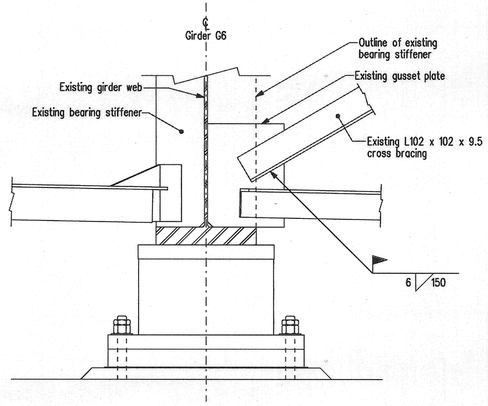

DETAIL "D"

Showing broken weld to be repaired
Scale 1 : 10

See Note 18

Pic #37

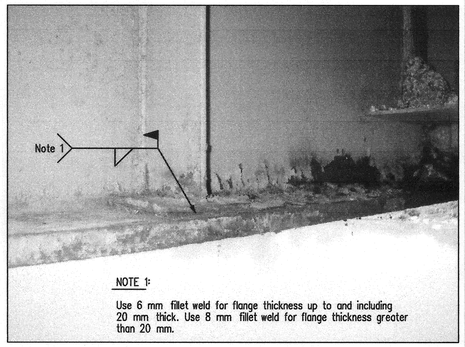

NOTE 1:

Use 6 mm fillet weld for flange thickness up to and including 20 mm thick. Use 8 mm fillet weld for flange thickness greater than 20 mm.

Type 1 Repair - Blast clean and repair broken or cracked welds.

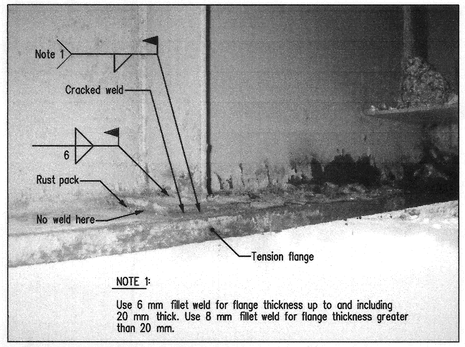

NOTE 1:

Use 6 mm fillet weld for flange thickness up to and including 20 mm thick. Use 8 mm fillet weld for flange thickness greater than 20 mm.

Type 2 Repair - Remove horizontal plate located between the stiffener and the tension flange. Clean out the rust. Install and weld new horizontal plate as shown.

MISCELLANEOUS STRUCTURAL STEEL REPAIRS - SCOPE OF WORK

WORK No.	Pic. #	DESCRIPTION OF WORK	WORK No.	Pic. #	DESCRIPTION OF WORK
1	—	Disassemble gusset plate to angle connection, remove rust, reassemble and reweld.	17	#20, 21 & 26	Weld girder to top bearing plate as shown on "DETAIL "C" (both sides of girder).
2	#33	Repair cracked weld at bottom of stiffener.	18	#4 & 5	Repair broken weld as shown on DETAIL "D".
3	—	Disassemble gusset plate to angle connection, remove rust, reassemble and reweld.	19	#8	Disassemble gusset plate to angle connection, remove rust, reassemble and reweld.
4	—	Blast clean corroded area. The Engineer will inspect the stiffener to tension flange welds and provide field instructions specifying either a Type 1 or Type 2 repair.	20	#19	Disassemble gusset plate to angle connection, remove rust, reassemble and reweld.
5	#27, 28 & 30	Blast clean corroded area. The Engineer will inspect the stiffener to tension flange welds and provide field instructions specifying either a Type 1 or Type 2 repair.	21	#14	Disassemble gusset plate to angle connection, remove rust, reassemble and reweld.
6	—	Remove corroded angle and rust. Install and weld new L.127 x 127 x 9.5. See DETAIL "A".	22	—	Disassemble gusset plate to angle connection, remove rust, reassemble and reweld.
7	—	Remove corroded angle and rust. Install and weld new L.127 x 127 x 9.5. See DETAIL "A".	23	—	Disassemble gusset plate to angle connection, remove rust, reassemble and reweld.
8	—	Disassemble gusset plate to angle connection, remove rust, reassemble and reweld.	24	#16	Repair broken welds at bottom of bearing stiffener.
9	—	Disassemble gusset plate to angle connection, remove rust, reassemble and reweld.	25	—	Disassemble gusset plate to angle connection, remove rust, reassemble and reweld.
10	#25	Straighten bent bearing keeper plate at top of rocker and reweld.	26	—	Disassemble gusset plate to angle connection, remove rust, reassemble and reweld.
11	#24	Repair cracked weld.	27	—	Disassemble gusset plate to angle connection, remove rust, reassemble and reweld.
12	#1, 2 & 3	Disassemble gusset plate to angle connection, remove rust, reassemble and reweld.	28	#34	Blast clean corroded area. The Engineer will inspect the stiffener to tension flange welds and provide field instructions specifying either a Type 1 or Type 2 repair.
13	#23	Provide new welds on diaphragm center gusset plate as shown on DETAIL "B".	29	#34	Blast clean corroded area. The Engineer will inspect the stiffener to tension flange welds and provide field instructions specifying either a Type 1 or Type 2 repair.
14	—	Disassemble gusset plate to angle connection, remove rust, reassemble and reweld.	30	#34	Blast clean corroded area. The Engineer will inspect the stiffener to tension flange welds and provide field instructions specifying either a Type 1 or Type 2 repair.
15	#6	Disassemble gusset plate to angle connection, remove rust, reassemble and reweld.	31	—	Remove corroded angle and rust. Install and weld new L.127 x 127 x 9.5. See DETAIL "A".
16	West #7 East #9, 10, & 11	Disassemble gusset plate to angle connection, remove rust, reassemble and reweld.	32	—	Blast clean area. The Engineer will inspect the condition and deterioration and provide a field instruction for repair methods.
			33	—	Repair as indicated

Note:
All pictures shown on sheets No.60, 61 and 62 were taken August of 2008.

LEGEND:

- Pack rust
- Pack rust and broken welds

REVISIONS		
DATE	BY	DESCRIPTION

PROVINCE OF MANITOBA
Mar. 15/10
S.S. RIHAL
REGISTERED PROFESSIONAL ENGINEER

MISCELLANEOUS STRUCTURAL STEEL REPAIRS

RECONSTRUCTION AND STRENGTHENING OF EXISTING BRIDGE
OVER ASSINIBOINE RIVER - CONTRACT THREE
ON P.T.H. No. 100 IN R.L.'S 72, 73 & 94
PARISH OF ST. CHARLES

CITY OF WINNIPEG

Manitoba
Infrastructure and Transportation
Water Control & Structures

RELEASED FOR CONSTRUCTION BY:
Ruth Jordan March 15/10
DIRECTOR DATE
STRUCTURES, DESIGN AND CONSTRUCTION BRANCH

DESIGN	BY: M.B.C.	SCALE: 1 : 200 or As Shown	SHEET No. 60
DETAILS	CHECKED: S.S.R.		
	BY: D.P.W.		SITE No. 2924-00
	CHECKED: S.S.R./J.J.		

...\292400contract3rehab.dgn 2010-03-12 2:40:50 PM