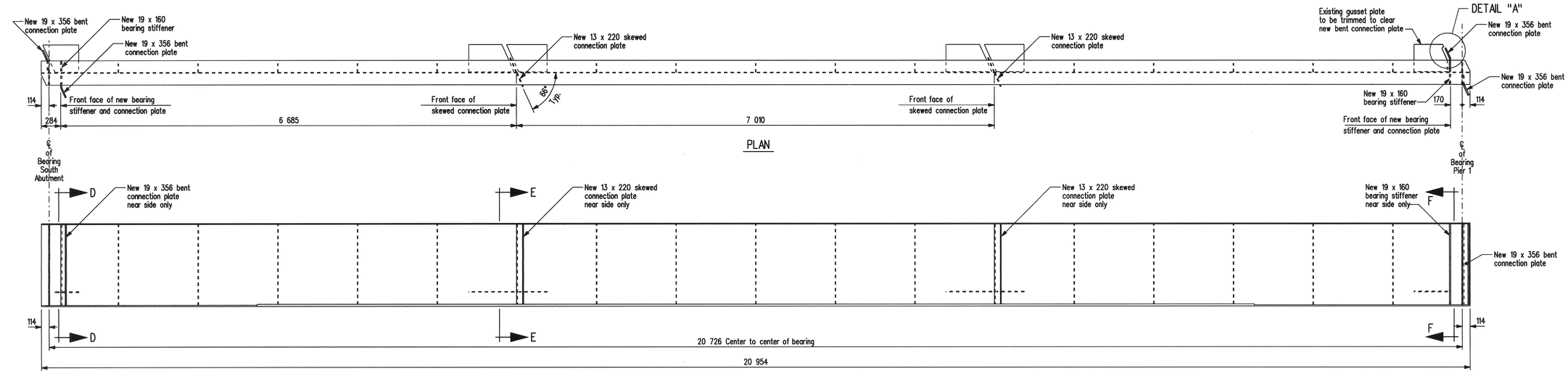

SOUTH ABUTMENT TO PIER 1

Showing proposed modifications to existing girder Mk. "G9".

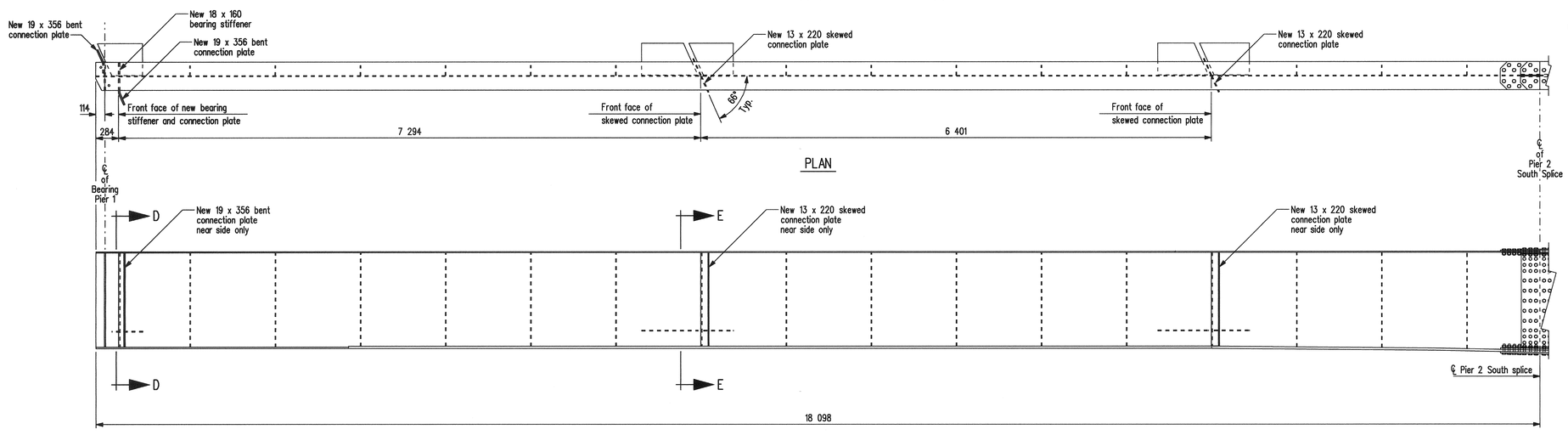

PIER 1 TO PIER 2 SOUTH SPLICE

Showing proposed modifications to existing girder Mk. "G9".

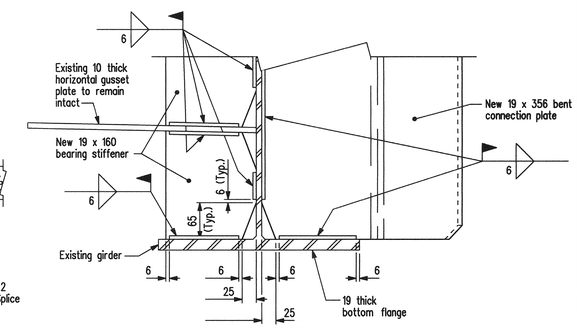

DETAIL "B"

Showing standard clip and weld terminations.
Scale 1 : 5

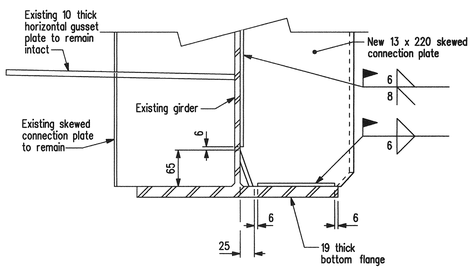

DETAIL "C"

Showing standard clip and weld terminations.
Scale 1 : 5

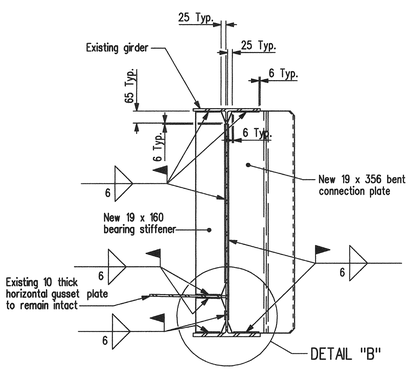

SECTION D-D

Showing new bent connection plate and bearing stiffener added to existing girders at South abutment.
Scale 1 : 15

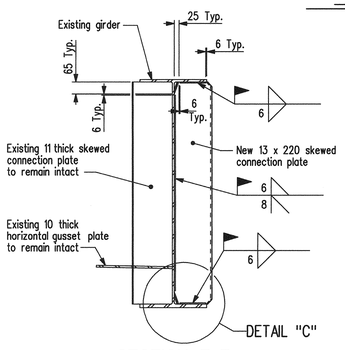

SECTION E-E

Showing new skewed connection plate.
Scale 1 : 15

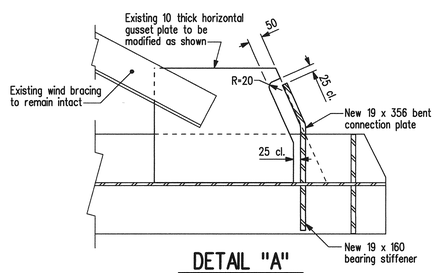

DETAIL "A"

Showing modifications to existing horizontal gusset plate at jacking diaphragms.
Scale 1 : 10

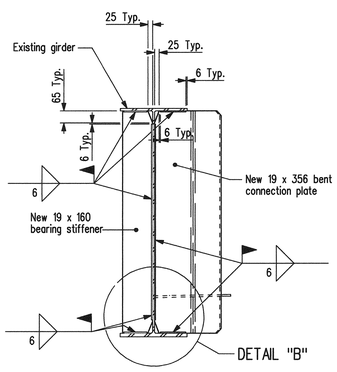

SECTION F-F

Showing new bent connection plate and bearing stiffener to be added to existing girders at North abutment & Piers 1 & 4.
Scale 1 : 15

REVISIONS		
DATE	BY	DESCRIPTION

PROVINCE OF MANITOBA
Mar. 15/10
S.S RIHAL
REGISTERED PROFESSIONAL ENGINEER

GIRDER G9 MODIFICATION DETAILS

RECONSTRUCTION AND STRENGTHENING OF EXISTING BRIDGE
OVER ASSINIBOINE RIVER - CONTRACT THREE
ON P.T.H. No. 100 IN R.L.'S 72, 73 & 94
PARISH OF ST. CHARLES

CITY OF WINNIPEG

Manitoba
Infrastructure and Transportation
Water Control & Structures

RELEASED FOR CONSTRUCTION BY:
Ruth Soden March 15/10
DIRECTOR — DATE
STRUCTURES, DESIGN AND CONSTRUCTION BRANCH

DESIGN	BY: M.B.C.	SCALE: 1 : 30 or As Shown	SHEET No. 56
	CHECKED: S.S.R.		
DETAILS	BY: D.P.W.		SITE No. 2924-00
	CHECKED: S.S.R./J.J.		

...\292400contract3rehab.dgn 2010-03-10 7:45:29 AM