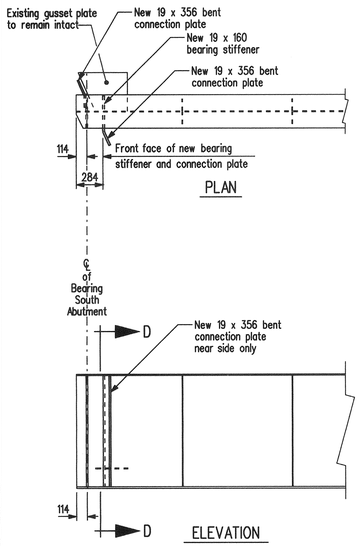

SOUTH ABUTMENT

Showing proposed modifications to existing girder Mk. "G3".

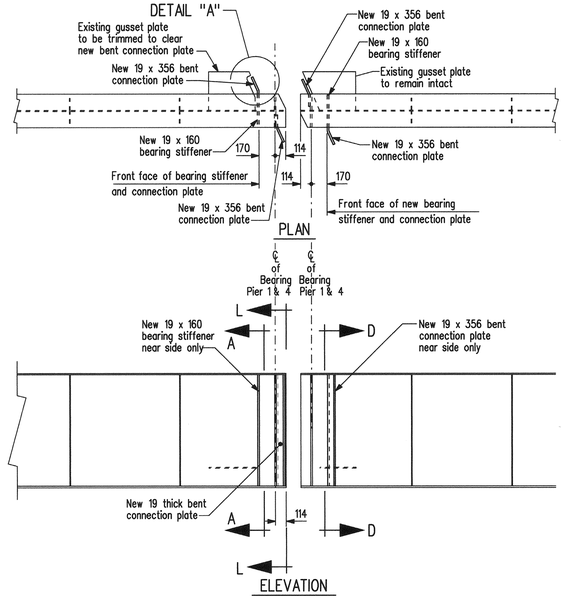

PIERS 1 & 4

Showing proposed modifications to existing girder Mk. "G3".

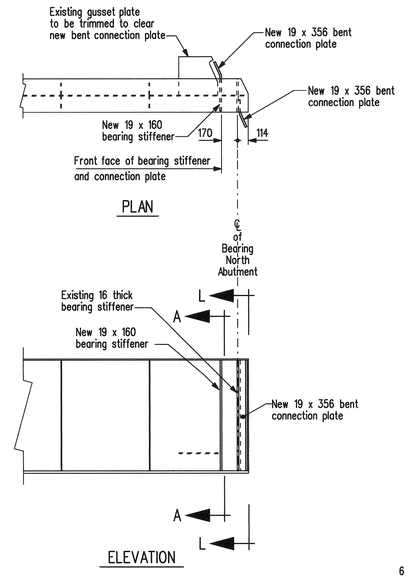

NORTH ABUTMENT

Showing proposed modifications to existing girder Mk. "G3".

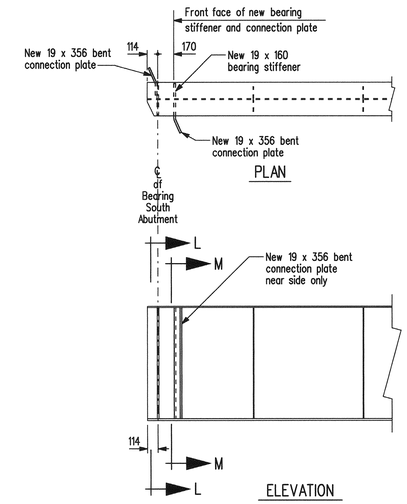

SOUTH ABUTMENT

Showing proposed modifications to existing girders Mk. "G2", "G4", "G5", "G6" & "G8".

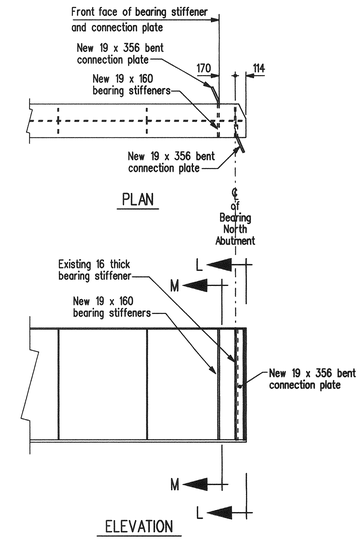

NORTH ABUTMENT

Showing proposed modifications to existing girders Mk. "G2", "G4", "G5", "G6" & "G8".

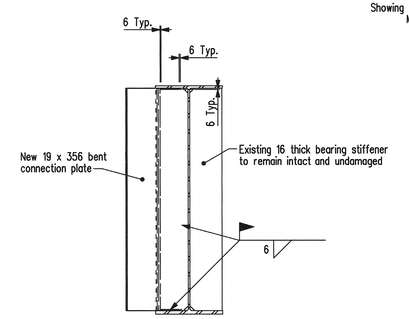

SECTION L-L

Showing 19 x 356 bent connection plate to be added to existing bearing stiffener at girder "G2", "G4", "G5", "G6" & "G8" at Piers 1 & 4 and North and South abutments.
Scale 1 : 15

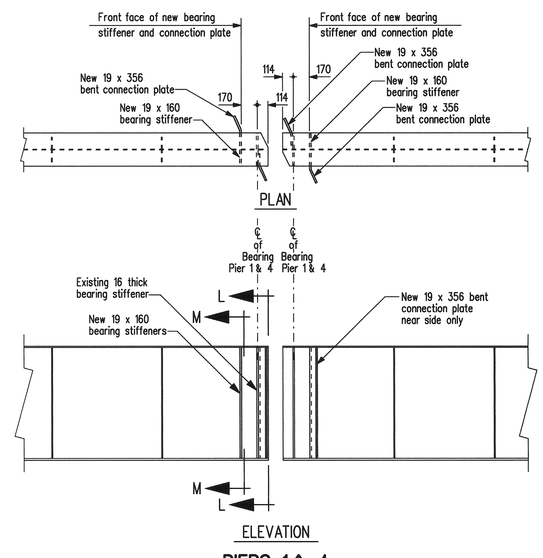

PIERS 1 & 4

Showing proposed modifications to existing girders Mk. "G2", "G4", "G5", "G6" & "G8".

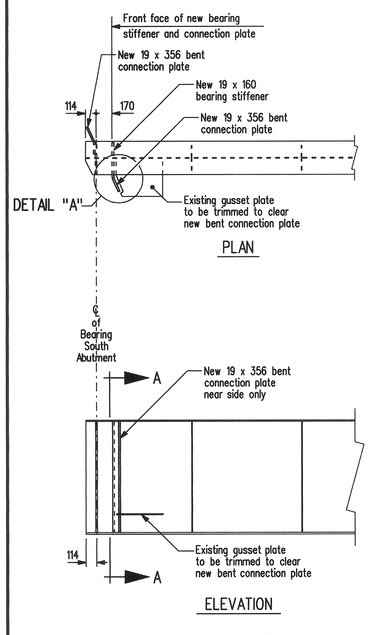

SOUTH ABUTMENT

Showing proposed modifications to existing girder Mk. "G7".

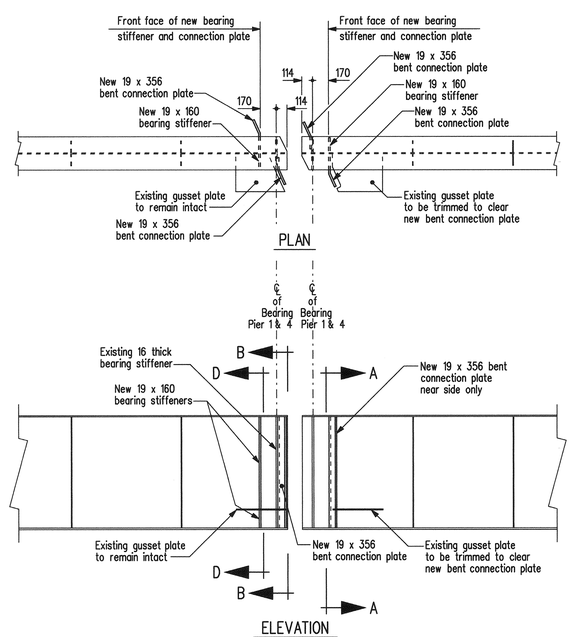

PIERS 1 & 4

Showing proposed modifications to existing girder Mk. "G7".

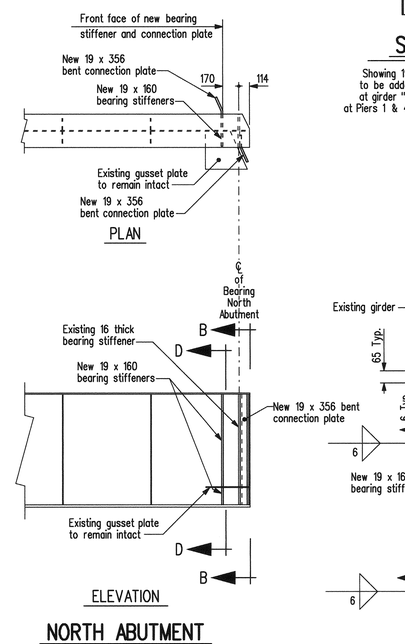

NORTH ABUTMENT

Showing proposed modifications to existing girder Mk. "G7".

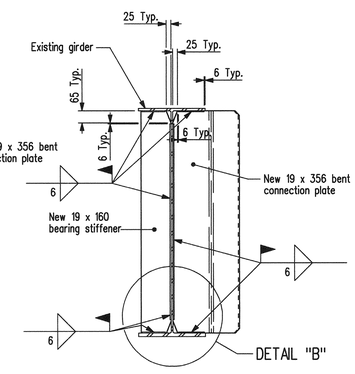

SECTION M-M

Showing new bent connection plate and bearing stiffener to be added to existing girder "G2", "G4", "G5", "G6" & "G8" at North abutment & Piers 1 & 4.
Scale 1 : 15

REVISIONS		
DATE	BY	DESCRIPTION

PROVINCE OF MANITOBA
Mar. 15/10
S.S
RIHAL
REGISTERED PROFESSIONAL ENGINEER

GIRDER G2 TO G8 MODIFICATION DETAILS

RECONSTRUCTION AND STRENGTHENING OF EXISTING BRIDGE
OVER ASSINIBOINE RIVER - CONTRACT THREE
ON P.T.H. No. 100 IN R.L.'S 72, 73 & 94
PARISH OF ST. CHARLES

CITY OF WINNIPEG

Manitoba
Infrastructure and Transportation
Water Control & Structures

RELEASED FOR CONSTRUCTION BY:
Ruth Siden March 15/10
DIRECTOR DATE
STRUCTURES DESIGN AND CONSTRUCTION BRANCH

DESIGN	BY: M.B.C.	SCALE: 1:30 or As Shown	SHEET No. 53
	CHECKED: S.S.R.		
DETAILS	BY: D.P.W.		SITE No. 2924-00
	CHECKED: S.S.R./J.J.		

..\292400contract3rehab.dgn 2010-03-10 7:30:22 AM