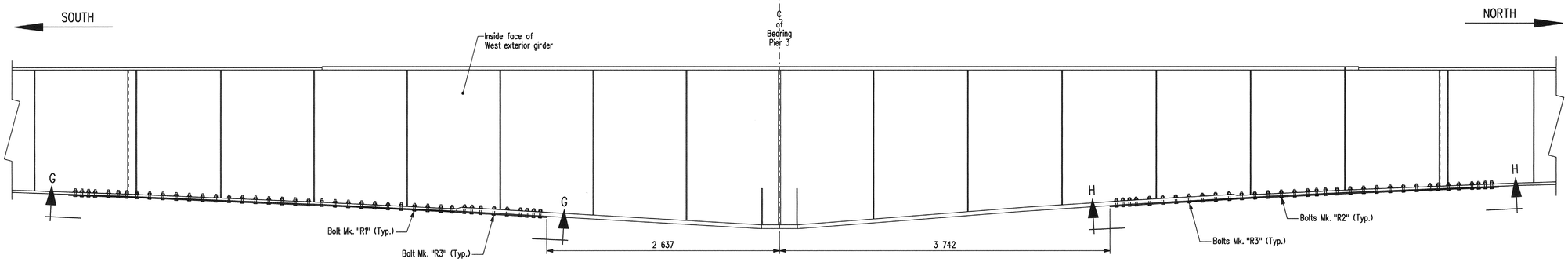

INTERIOR GIRDER ELEVATION

Showing locations of new bottom flange cover plates for interior girders at Pier 3.
Typical for girders Mk. "G2" through "G8".
Scale 1:25

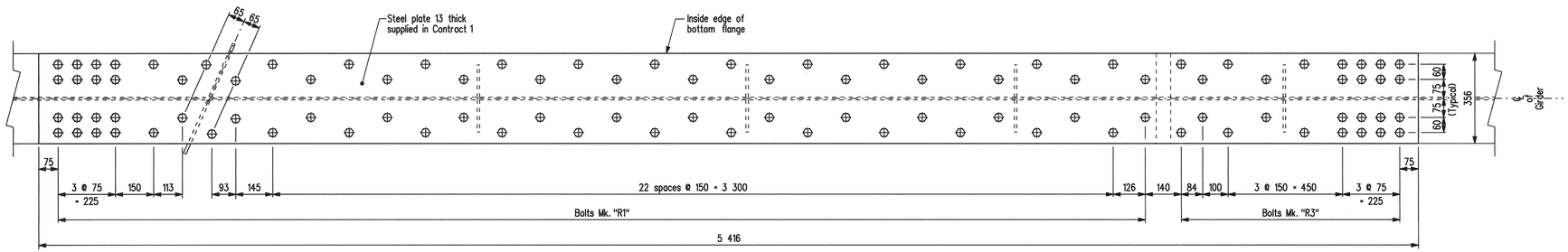

SECTION G-G

Showing bolt locations to be field drilled in interior girders "G2" through "G8"
for new bottom flange cover plate installation at Pier 3.

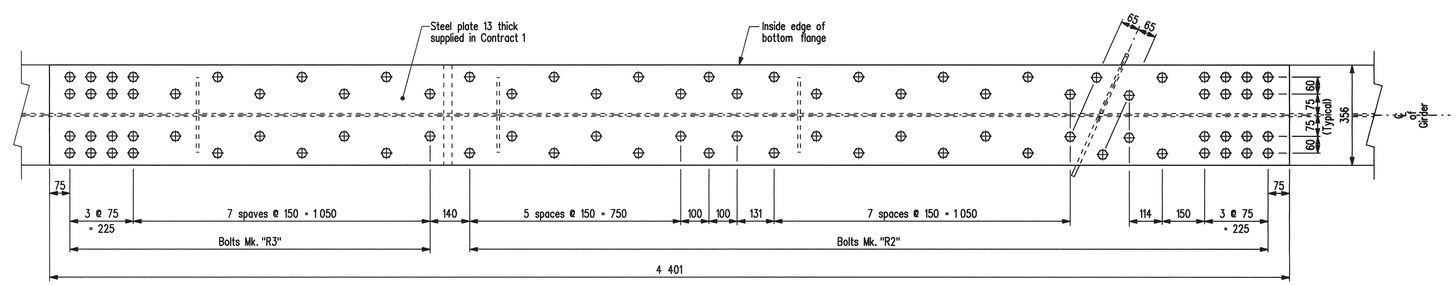

SECTION H-H

Showing bolt locations to be field drilled in interior girders "G2" through "G8"
for new bottom flange cover plate installation at Pier 3.

REVISIONS		
DATE	BY	DESCRIPTION

PROVINCE OF MANITOBA
Mar. 15/10
S.S. RIHAL
REGISTERED PROFESSIONAL ENGINEER

GIRDER G2 TO G8 STRENGTHENING DETAILS

RECONSTRUCTION AND STRENGTHENING OF EXISTING BRIDGE
OVER ASSINIBOINE RIVER - CONTRACT THREE
ON P.T.H. No. 100 IN R.L.'S 72, 73 & 94
PARISH OF ST. CHARLES

CITY OF WINNIPEG

Manitoba
Infrastructure and Transportation
Water Control & Structures

RELEASED FOR CONSTRUCTION BY:
Ruth J. Soden March 15/10
DIRECTOR DATE
STRUCTURES DESIGN AND CONSTRUCTION BRANCH

DESIGN	BY: M.B.C.	SCALE: 1:10 or As Shown
	CHECKED: S.S.R.	SHEET No. 52
DETAILS	BY: D.P.W.	
	CHECKED: S.S.R./J.J.	SITE No. 2924-00

...\292400contract3rehab.dgn 2010-03-10 7:28:02 AM