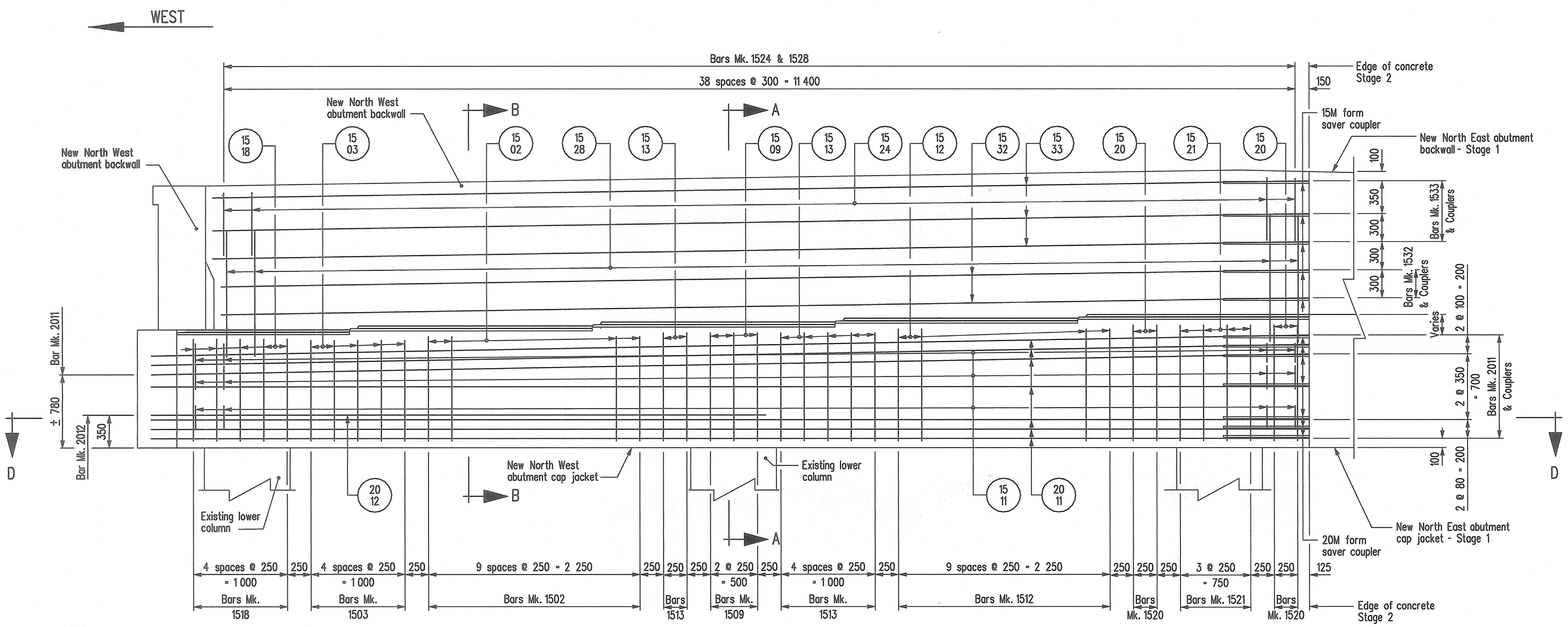

NORTH ABUTMENT PART FRONT ELEVATION

Showing only reinforcing steel in WEST side of NORTH cap and backwall.
Normal to face of abutment.

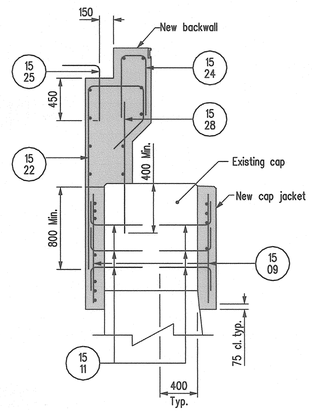

SECTION A-A

Backwall reinforcing typical.

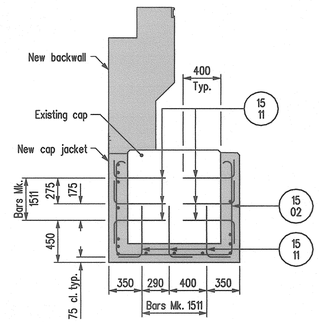

SECTION B-B

Not showing backwall reinforcing for clarity.

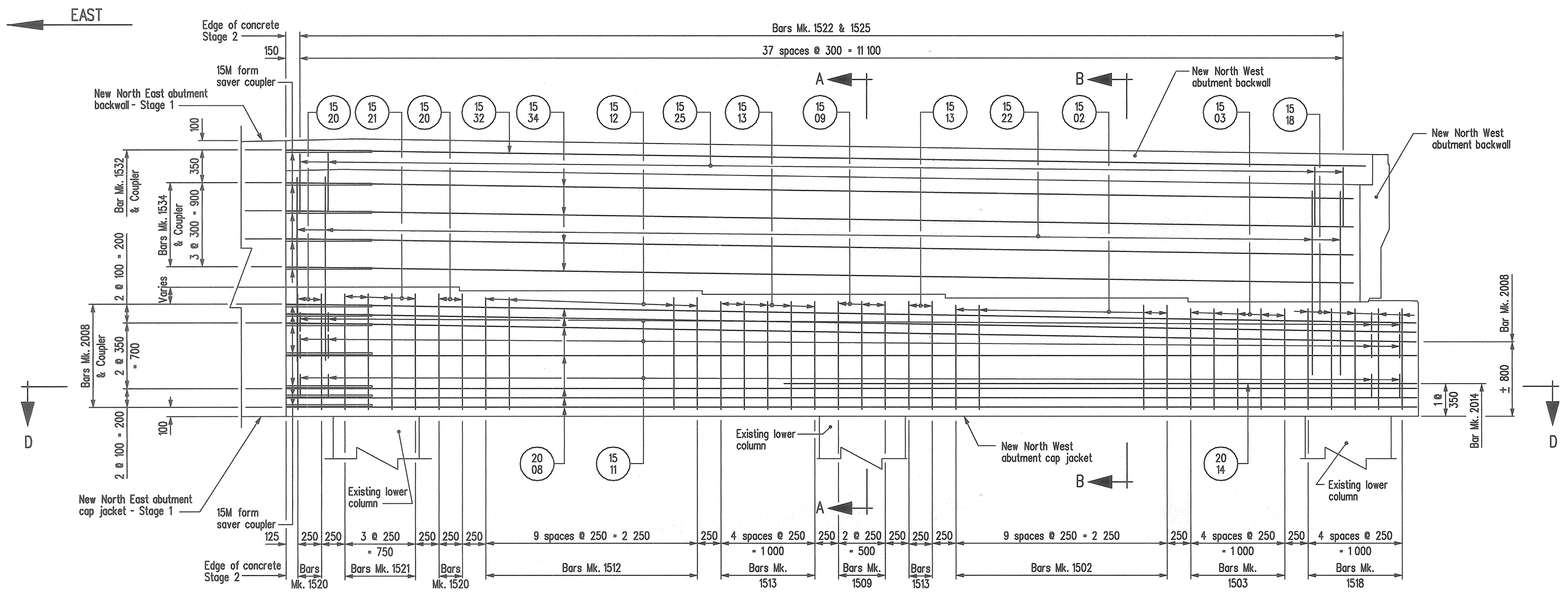

NORTH ABUTMENT PART REAR ELEVATION

Showing only reinforcing steel in WEST side of NORTH cap and backwall.
Wingwall and fillet not shown for clarity. Normal to face of abutment.

NOTES :

1. Rebar Form Savers shall be Erico Lenton Form Saver splicing system or equivalent as approved by the Engineer.
2. Rebar Couplers shall be Erico Lenton Lock mechanical rebar splicing system or equivalent as approved by the engineer. The couplers shall develop the full yield strength in tension of the coupled bars.
3. Concrete cover shall be 75 mm unless noted otherwise.
4. Minimum lap lengths for bars 15M = 560 mm, for bars 20M = 680 mm, for bars 25M = 860 mm.
5. See Sheet No.39 for SECTION D-D.

REVISIONS		
DATE	BY	DESCRIPTION

PROVINCE OF MANITOBA
Mar. 15/10
S.S RIHAL
REGISTERED PROFESSIONAL ENGINEER

NORTH ABUTMENT MODIFICATIONS STAGE 2 - REINFORCING DETAILS

RECONSTRUCTION AND STRENGTHENING OF EXISTING BRIDGE
OVER ASSINIBOINE RIVER - CONTRACT THREE
ON P.T.H. No. 100 IN R.L.'S 72, 73 & 94
PARISH OF ST. CHARLES

CITY OF WINNIPEG

Manitoba
Infrastructure and Transportation
Water Control & Structures

RELEASED FOR CONSTRUCTION BY:
DIRECTOR — DATE
STRUCTURES, DESIGN AND CONSTRUCTION BRANCH

DESIGN	BY: M.B.C.	SCALE: 1:30 or As Shown	SHEET No. 38
	CHECKED: S.S.R.		
DETAILS	BY: M.S.		SITE No. 2924-00
	CHECKED: S.S.R./J.J.		

...\292400_Abut_Reinf_Contract3.dgn 2010-03-09 11:43:29 AM