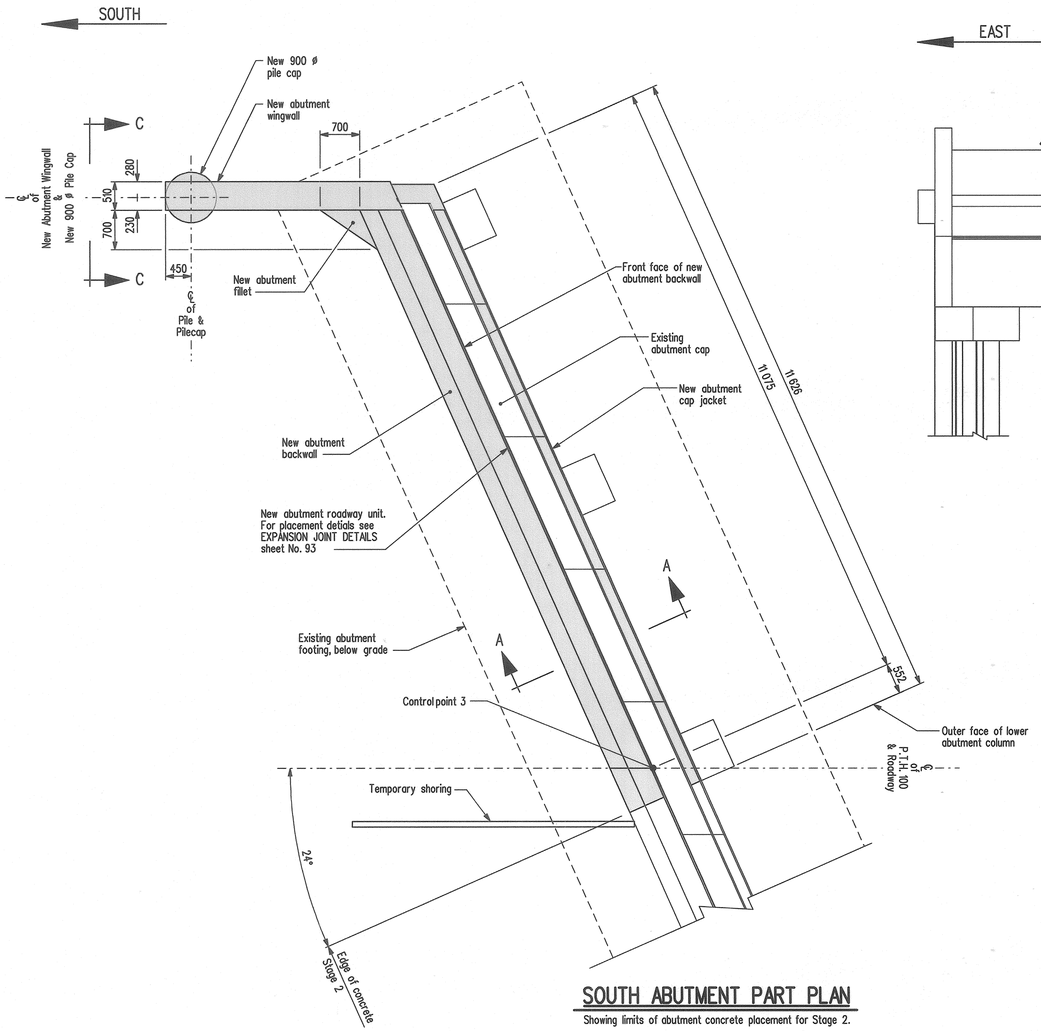

SOUTH ABUTMENT PART PLAN

Showing limits of abutment concrete placement for Stage 2.

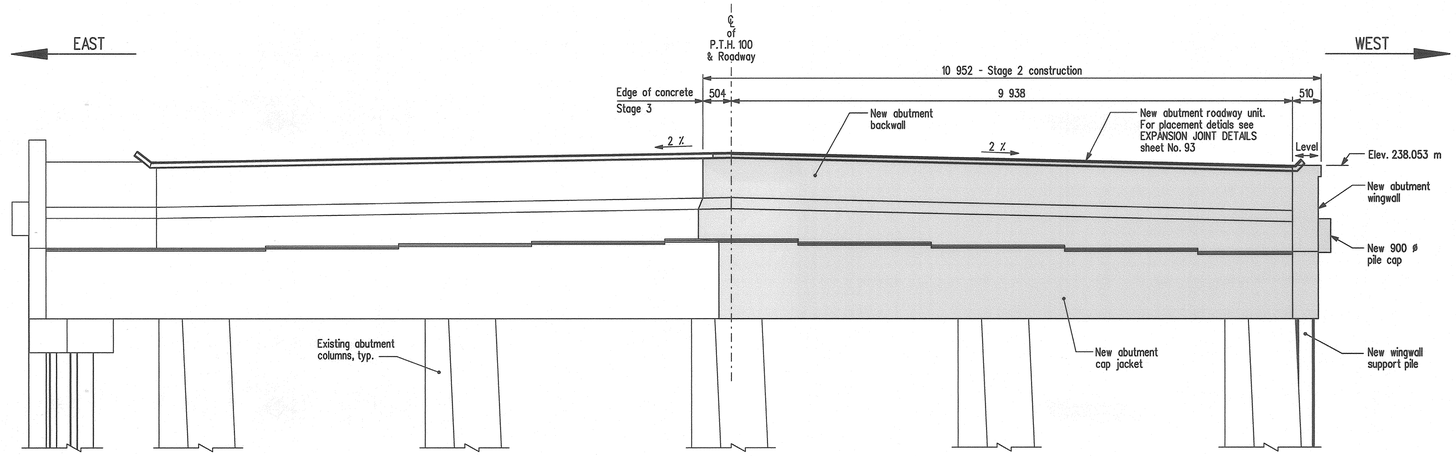

SOUTH ABUTMENT ELEVATION

Showing Stage 2 concrete details.
Perpendicular to ℄ of T.C.H. & Bridge.

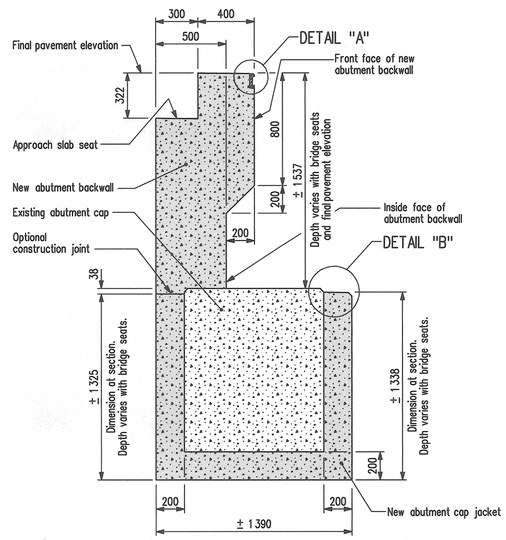

SECTION A-A

Scale 1 : 20

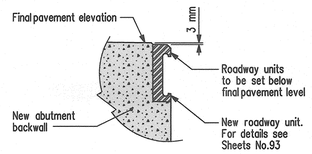

DETAIL "A"

Showing roadway unit recess at abutments.
Scale 1 : 5

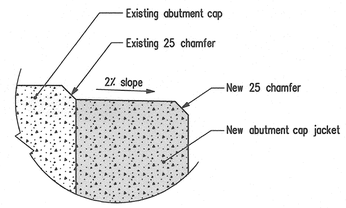

DETAIL "B"

Scale 1 : 5

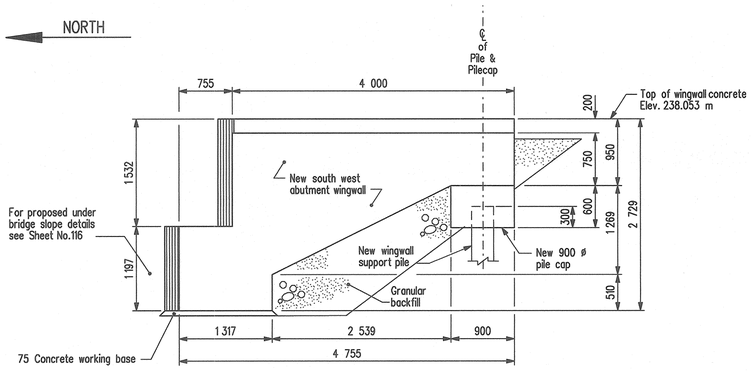

ELEVATION

Showing only south west wingwall, pile and pile cap for clarity.
Shown normal to face of wingwall.
Scale 1 : 40

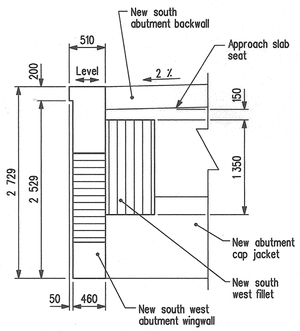

SECTION C-C

Shown normal to ℄ of roadway.
Not showing pile cap for clarity.
Scale 1 : 40

REVISIONS		
DATE	BY	DESCRIPTION

PROVINCE OF MANITOBA
Mar. 15/10
S.S. RIHAL
REGISTERED PROFESSIONAL ENGINEER

SOUTH ABUTMENT MODIFICATIONS STAGE 2 - CONCRETE DETAILS

RECONSTRUCTION AND STRENGTHENING OF EXISTING BRIDGE
OVER ASSINIBOINE RIVER - CONTRACT THREE
ON P.T.H. No. 100 IN R.L.'S 72, 73 & 94
PARISH OF ST. CHARLES

CITY OF WINNIPEG

Manitoba
Infrastructure and Transportation
Water Control & Structures

RELEASED FOR CONSTRUCTION BY:
Ruth Eden March 15/10
DIRECTOR — DATE
STRUCTURES, DESIGN AND CONSTRUCTION BRANCH

DESIGN	BY: M.B.C.	SCALE: 1:50 or As Shown	SHEET No. 33
	CHECKED: S.S.R.		
DETAILS	BY: M.S.		SITE No. 2924-00
	CHECKED: S.S.R./J.J.		

...\292400_Abut_Conc_Contract3_3d.dgn 2010-03-12 1:34:13 PM