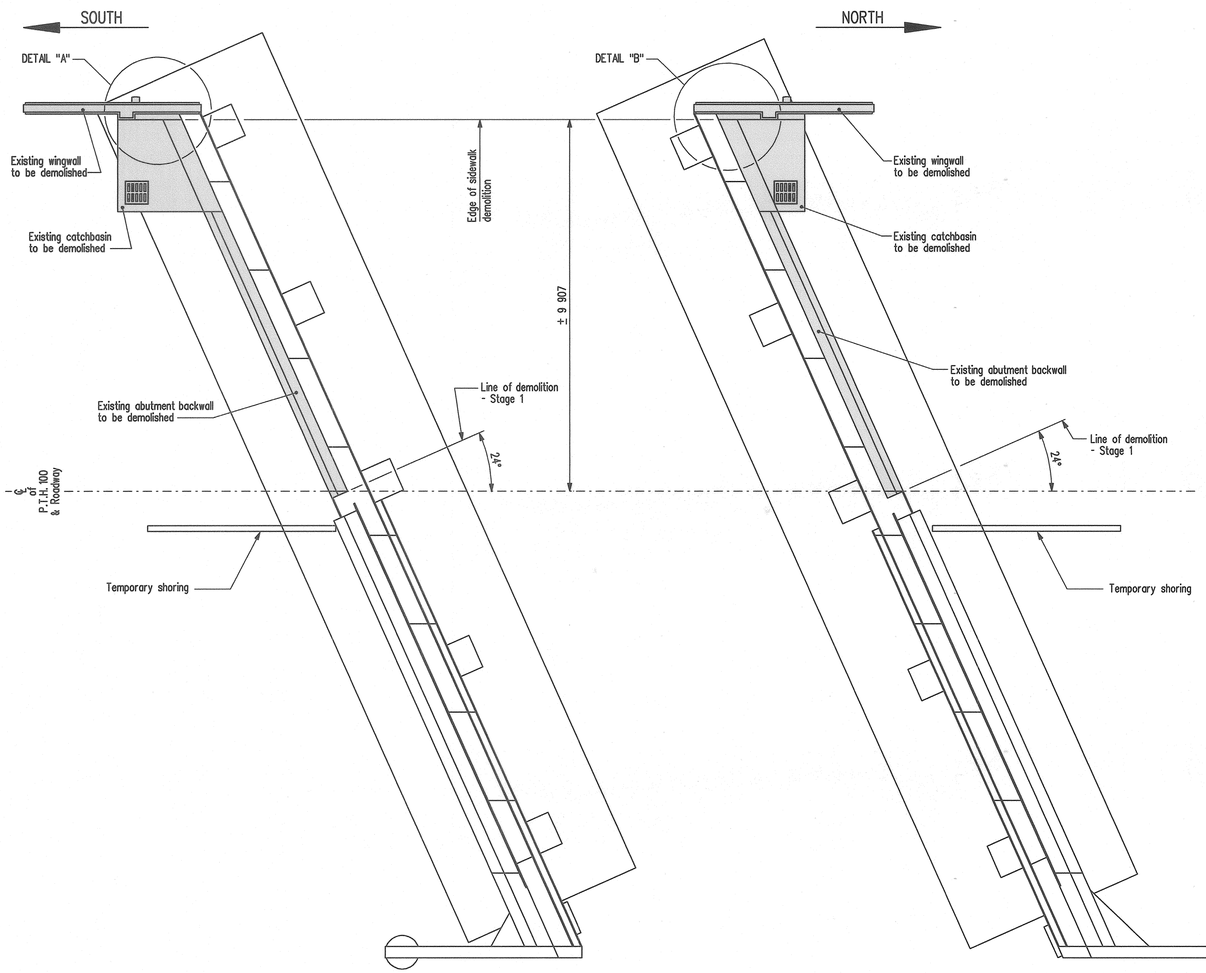

PART PLAN

Showing limits of abutment demolition for Stage 2.
Piers not shown.

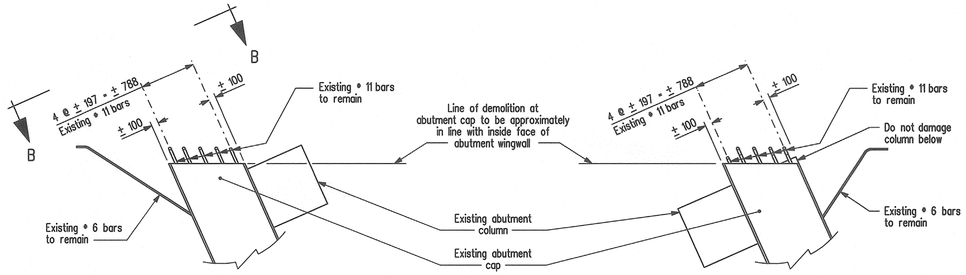

DETAIL "A"

Showing limits of abutment demolition for Stage 2.
Showing only abutment cap, column, existing ϕ 6 & ϕ 11 bars for clarity.
Scale 1 : 40

DETAIL "B"

Showing limits of abutment demolition for Stage 2.
Showing only abutment cap, column, existing ϕ 6 & ϕ 11 bars for clarity.
Scale 1 : 40

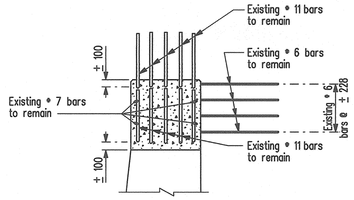

SECTION B-B

Typical bar layout. North abutment similar but opposite.
Scale 1 : 40

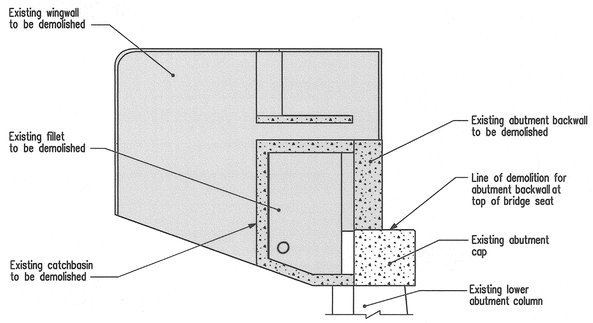

SECTION A-A

Showing limits of abutment demolition for Stage 2.
South abutment shown. North abutment similar but opposite.
Scale 1 : 50

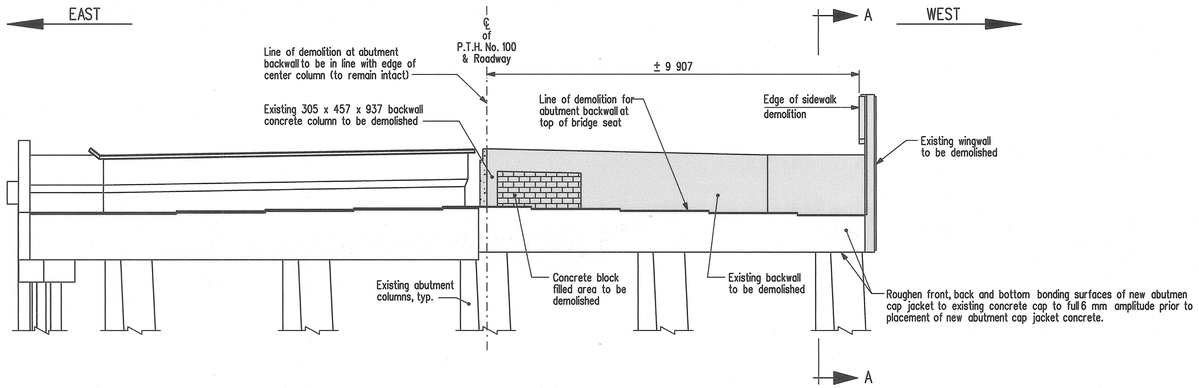

SOUTH ABUTMENT ELEVATION

Showing limits of abutment demolition for Stage 2.
South abutment shown. North abutment similar but opposite.
Shown perpendicular to ℄ of P.T.H. 100 & roadway.

REVISIONS		
DATE	BY	DESCRIPTION

PROVINCE OF MANITOBA
Mar. 15/10
S.S RIHAL
REGISTERED PROFESSIONAL ENGINEER

ABUTMENT MODIFICATIONS STAGE 2 DEMOLITION

RECONSTRUCTION AND STRENGTHENING OF EXISTING BRIDGE
OVER ASSINIBOINE RIVER - CONTRACT THREE
ON P.T.H. No. 100 IN R.L.'S 72, 73 & 94
PARISH OF ST. CHARLES

CITY OF WINNIPEG

Manitoba
Infrastructure and Transportation
Water Control & Structures

RELEASED FOR CONSTRUCTION BY:
Ruth Yodean March 15/10
DIRECTOR — DATE
STRUCTURES DESIGN AND CONSTRUCTION BRANCH

DESIGN	BY: M.B.C.	SCALE: 1 : 75 or As Shown	SHEET No. 32
	CHECKED: S.S.R.		
DETAILS	BY: M.S.		SITE No. 2924-00
	CHECKED: S.S.R./J.J.		

...\292400_Abut_Conc_Contract3_3d.dgn 2010-03-10 2:40:27 PM