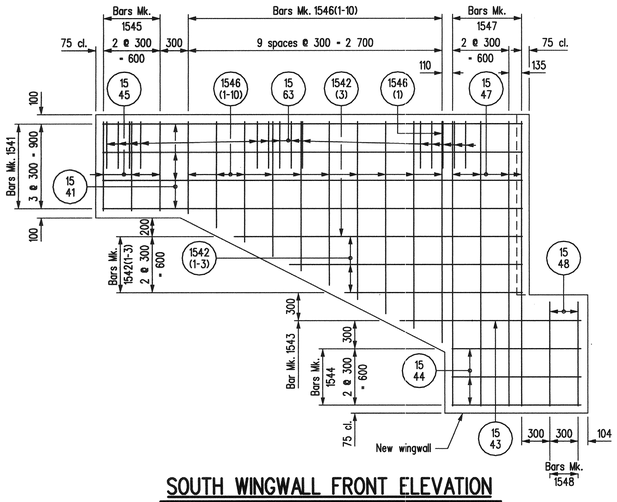

SOUTH WINGWALL FRONT ELEVATION

Showing reinforcing steel in outside face of S.E. wingwall.

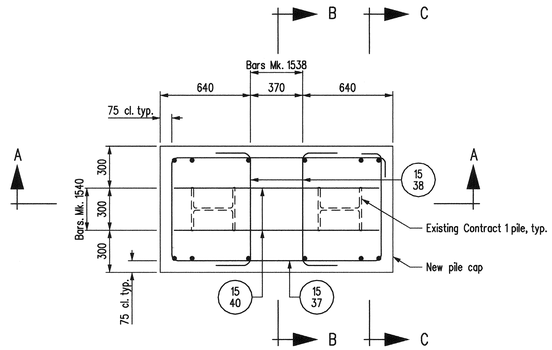

PILE CAP PLAN

Not showing wingwall & abutment cap extension for clarity.
Scale 1 : 20

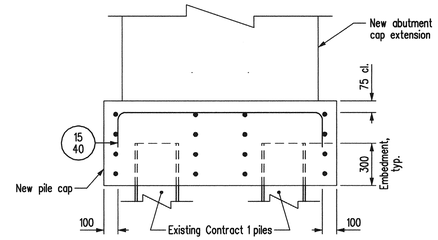

SECTION A-A

Not showing wingwall for clarity.
Scale 1 : 20

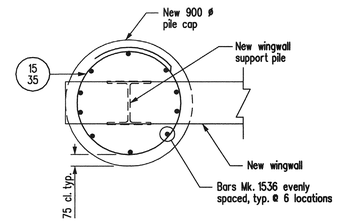

900 ø PILE CAP PLAN

Not showing wingwall reinforcing for clarity.
Scale 1 : 20

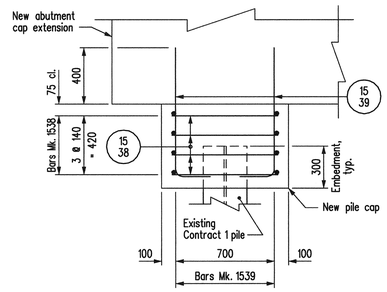

SECTION B-B

Not showing wingwall for clarity.
Scale 1 : 20

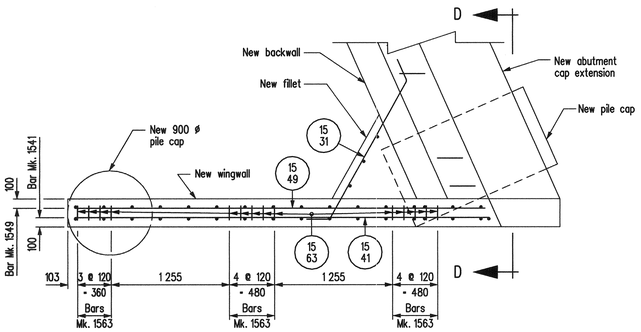

SOUTH WINGWALL PLAN

Showing wingwall reinforcing steel.

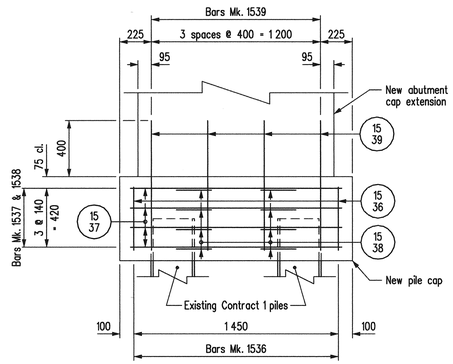

PILE CAP ELEVATION

Not showing wingwall for clarity.
Scale 1 : 20

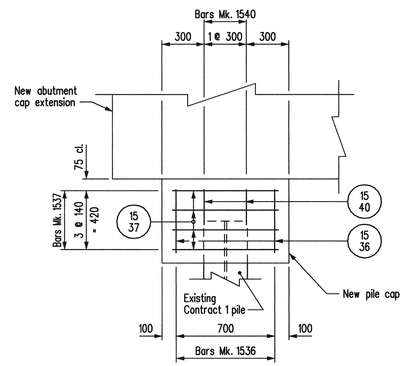

SECTION C-C

Not showing wingwall for clarity.
Scale 1 : 20

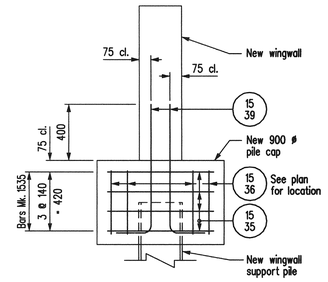

900 ø PILE CAP END ELEVATION

Not showing wingwall reinforcing for clarity.
Scale 1 : 20

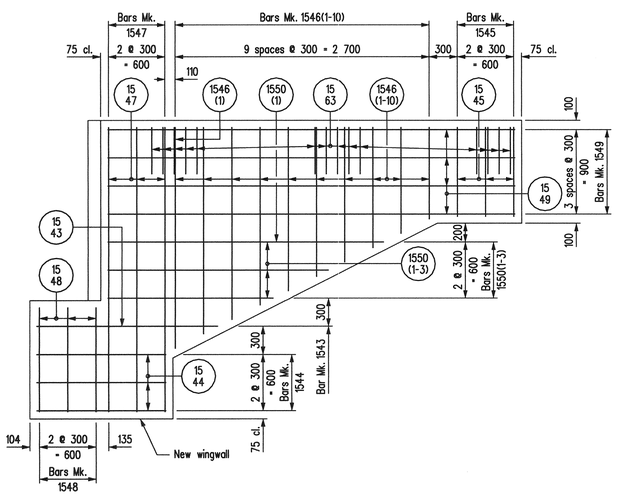

SOUTH WINGWALL REAR ELEVATION

Showing reinforcing steel in inside face of S.E. wingwall.

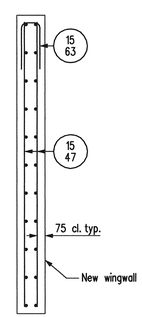

SECTION D-D

Not showing abutment cap extension, pile cap, backwall, piles or fillet for clarity.

NOTES :

1. Concrete cover shall be 75 mm unless noted otherwise.
2. Minimum lap lengths for bars 15M = 560 mm, for bars 20M = 680 mm, for bars 25M = 860 mm.

REVISIONS		
DATE	BY	DESCRIPTION

PROVINCE OF MANITOBA — Mar. 15/10 — S.S RIHAL — REGISTERED PROFESSIONAL ENGINEER

SOUTH ABUTMENT MODIFICATIONS - STAGE 1 - REINFORCING DETAILS

RECONSTRUCTION AND STRENGTHENING OF EXISTING BRIDGE OVER ASSINIBOINE RIVER - CONTRACT THREE ON P.T.H. No. 100 IN R.L.'S 72, 73 & 94
PARISH OF ST. CHARLES

CITY OF WINNIPEG

Manitoba Infrastructure and Transportation
Water Control & Structures

RELEASED FOR CONSTRUCTION BY: Ruth Eden March 15/10
DIRECTOR — DATE
STRUCTURES, DESIGN AND CONSTRUCTION BRANCH

DESIGN	BY: M.B.C.	SCALE: 1 : 30 or	SHEET No. 25
	CHECKED: S.S.R.		
DETAILS	BY: M.S.	As Shown	SITE No. 2924-00
	CHECKED: S.S.R.\J.J.		

...\292400_Abut_Reinf_Contract3.dgn 2010-03-09 11:43:32 AM