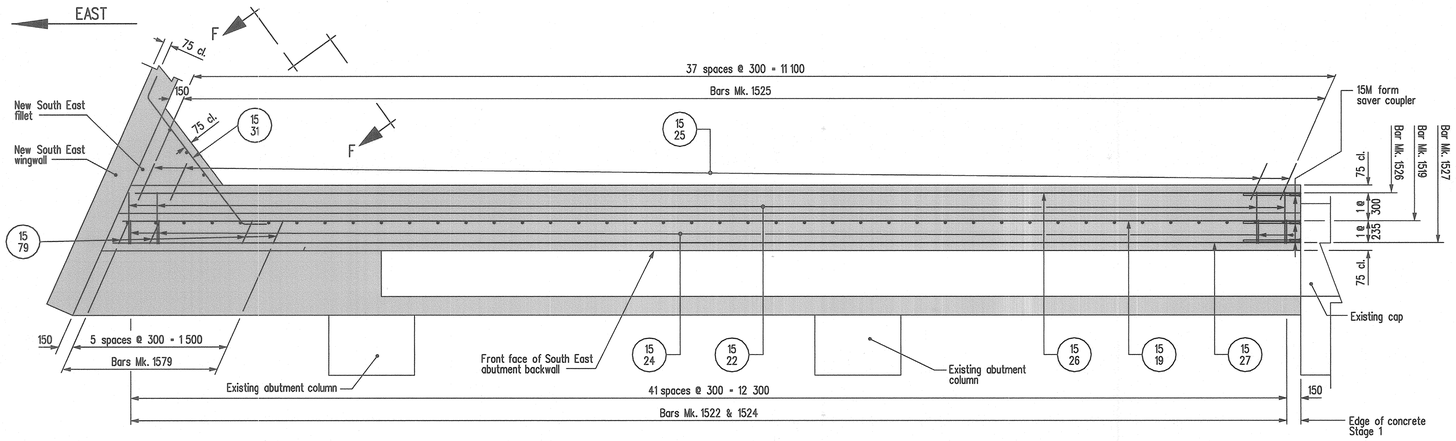

SOUTH ABUTMENT PART PLAN

Showing only reinforcing steel in east side of backwall and fillet.

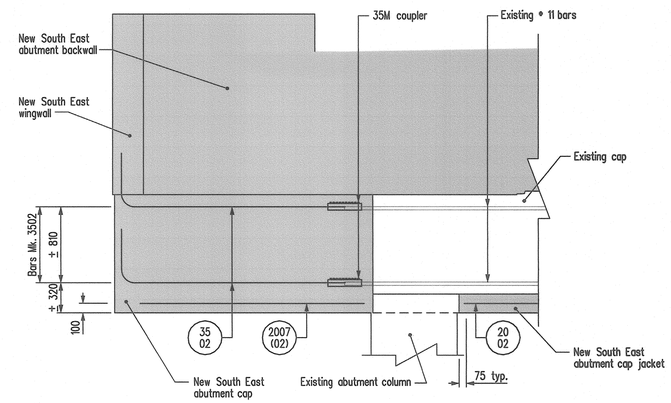

SECTION E-E

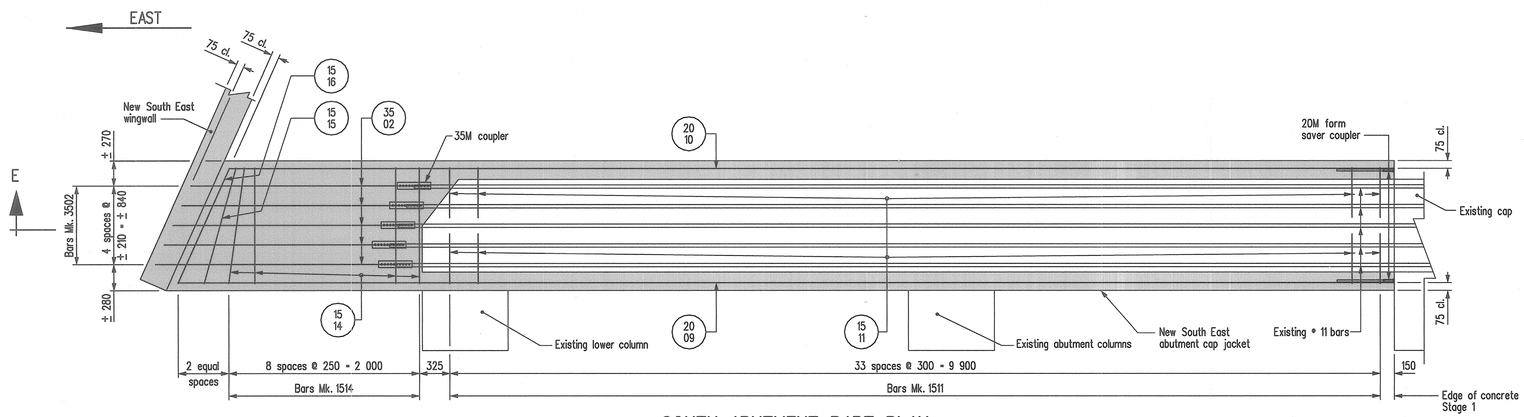

SOUTH ABUTMENT PART PLAN

Showing only reinforcing steel in east side of cap.

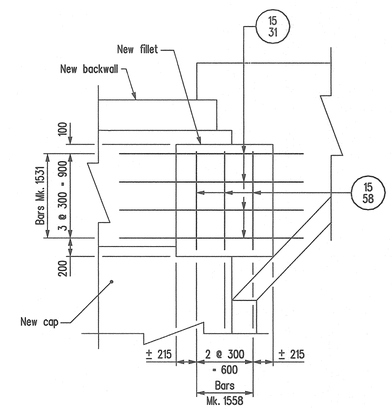

SECTION F-F

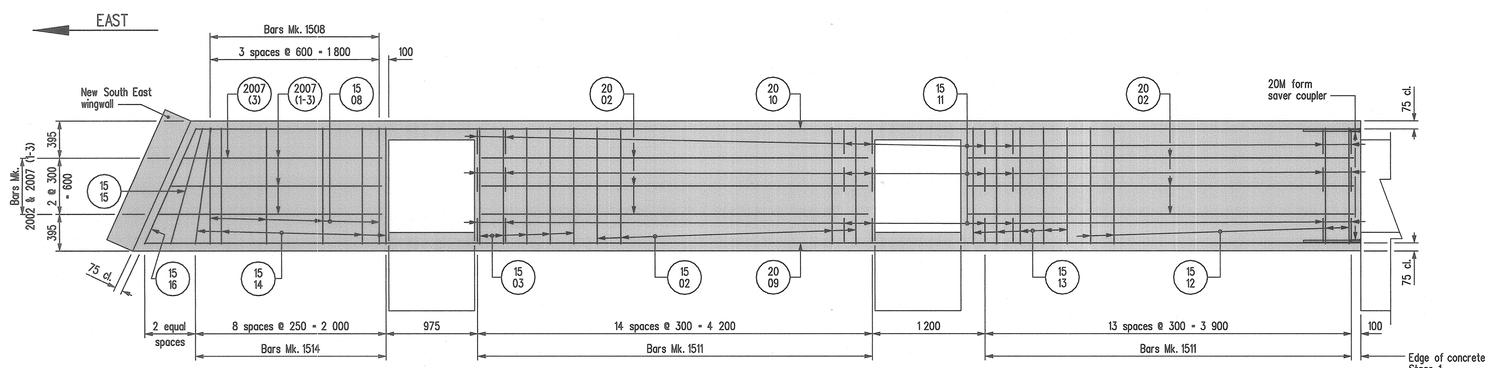

SECTION D-D

NOTES :

1. Rebar Form Savers shall be Erico Lenton Form Saver splicing system or equivalent as approved by the Engineer.
2. Rebar Couplers shall be Erico Lenton Lock mechanical rebar splicing system or equivalent as approved by the engineer. The couplers shall develop the full yield strength in tension of the coupled bars.
3. Concrete cover shall be 75 mm unless noted otherwise.
4. Minimum lap lengths for bars 15M = 560 mm, for bars 20M = 680 mm, for bars 25M = 860 mm.
5. See Sheet No.23 for location of SECTION D-D.

REVISIONS		
DATE	BY	DESCRIPTION

PROVINCE OF MANITOBA
Mar 15/10
S.S. RIHAL
REGISTERED PROFESSIONAL ENGINEER

SOUTH ABUTMENT MODIFICATIONS - STAGE 1 - REINFORCING DETAILS

RECONSTRUCTION AND STRENGTHENING OF EXISTING BRIDGE OVER ASSINIBOINE RIVER - CONTRACT THREE ON P.T.H. No. 100 IN R.L.'S 72, 73 & 94
PARISH OF ST. CHARLES

CITY OF WINNIPEG

Manitoba
Infrastructure and Transportation
Water Control & Structures

DESIGN	BY: M.B.C.	
	CHECKED: S.S.R.	
DETAILS	BY: M.S.	
	CHECKED: S.S.R./J.J.	

RELEASED FOR CONSTRUCTION BY:
Ruth Yoden Mar 15/10
DIRECTOR / DATE
STRUCTURES, DESIGN AND CONSTRUCTION BRANCH

SCALE: 1 : 30 or As Shown
SHEET No. 24
SITE No. 2924-00

...\292400_Abut_Reinf_Contract3.dgn 2010-03-09 11:43:34 AM