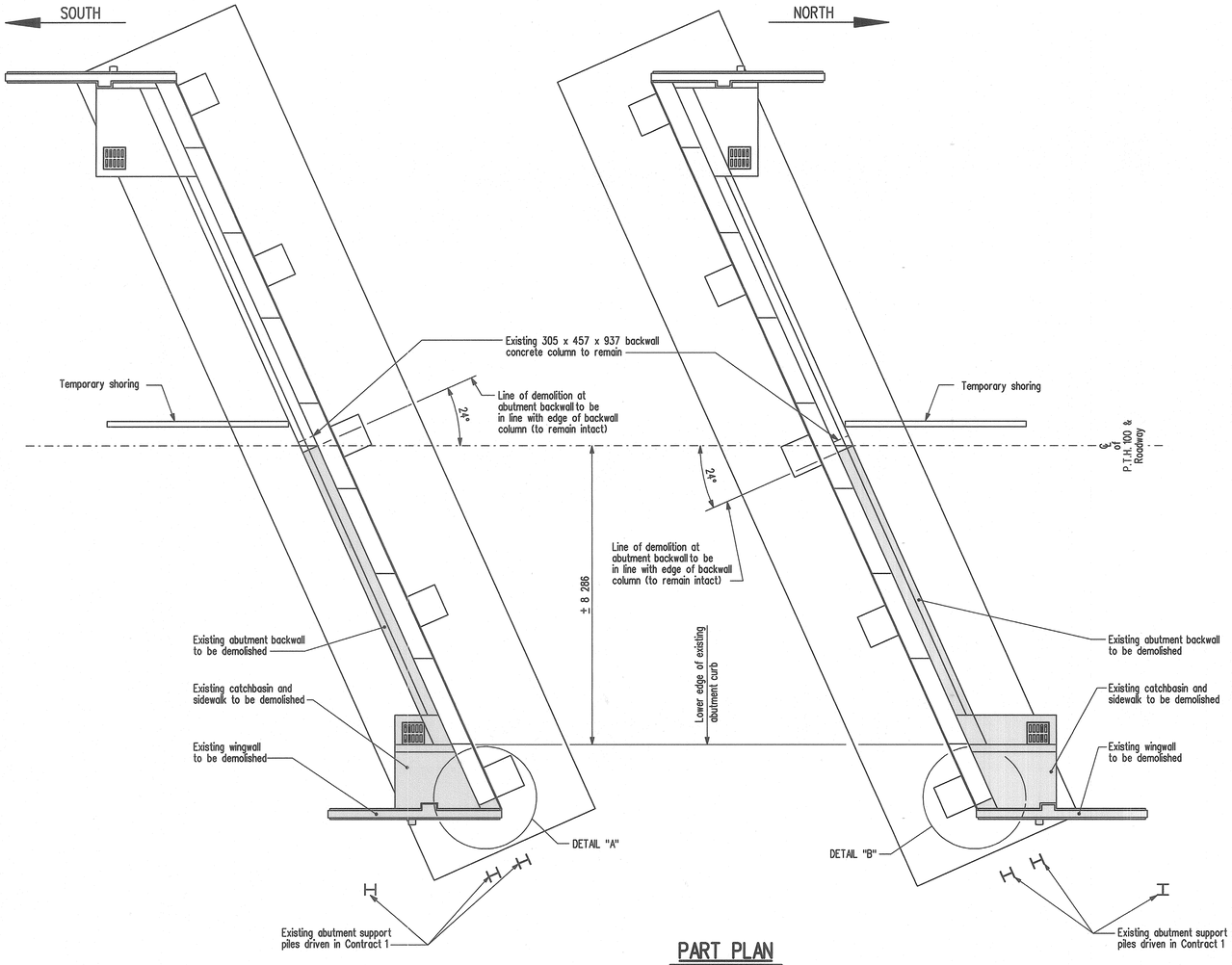

PART PLAN

Showing limits of abutment demolition for Stage 1.
Piers not shown.

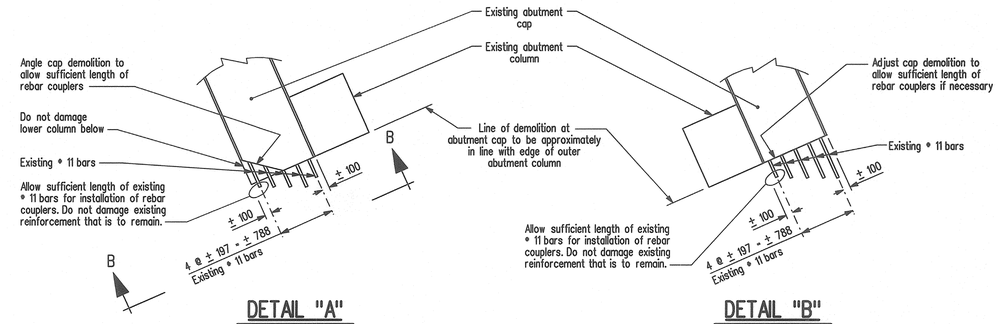

DETAIL "A"

Showing limits of abutment demolition for Stage 1.
Showing only abutment cap, column and existing • 11 bars for clarity.
Scale 1 : 40

DETAIL "B"

Showing limits of abutment demolition for Stage 1.
Showing only abutment cap, column and existing • 11 bars for clarity.
Scale 1 : 40

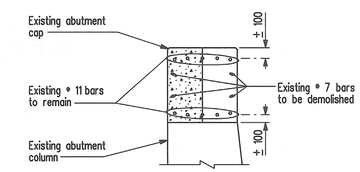

SECTION B-B

Showing typical •11 bar layout.
Scale 1 : 40

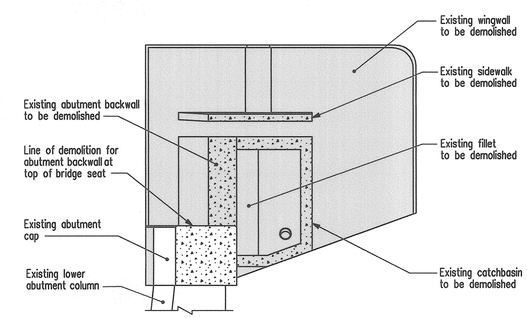

SECTION A-A

Showing limits of abutment demolition for Stage 1.
South abutment shown. North abutment similar but opposite.
Scale 1 : 50

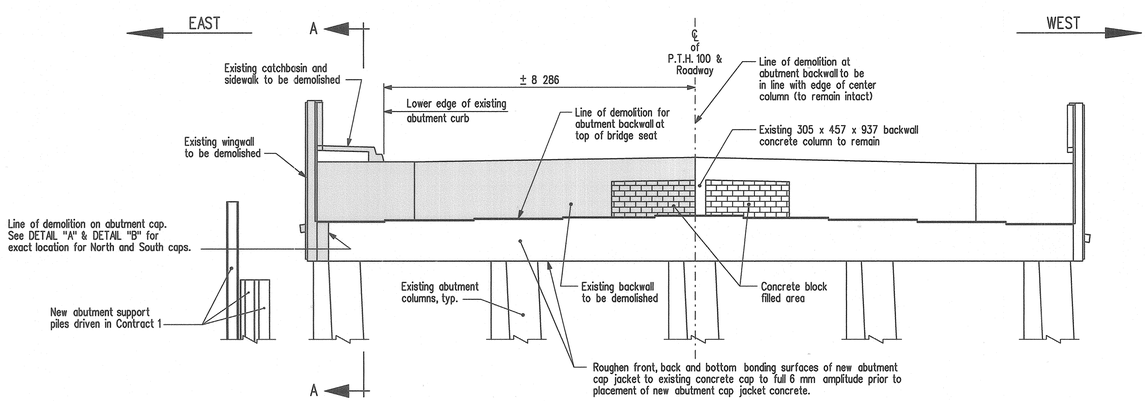

SOUTH ABUTMENT ELEVATION

Showing limits of abutment demolition for Stage 1.
South abutment shown. North abutment similar but opposite.
Shown perpendicular to P.T.H. 100 & Roadway.

REVISIONS		
DATE	BY	DESCRIPTION

PROVINCE OF MANITOBA
Mar. 15/10
S.S RIHAL
REGISTERED PROFESSIONAL ENGINEER

ABUTMENT MODIFICATIONS
STAGE 1 - DEMOLITION

RECONSTRUCTION AND STRENGTHENING OF EXISTING BRIDGE
OVER ASSINIBOINE RIVER - CONTRACT THREE
ON P.T.H. No. 100 IN R.L.'S 72, 73 & 94
PARISH OF ST. CHARLES

CITY OF WINNIPEG

Manitoba
Infrastructure and Transportation
Water Control & Structures

RELEASED FOR CONSTRUCTION BY:
Keith Sladen March 15/10
DIRECTOR — DATE
STRUCTURES, DESIGN AND CONSTRUCTION BRANCH

DESIGN	BY: M.B.C.	SCALE: 1 : 75 or As Shown	SHEET No. 21
	CHECKED: S.S.R.		
DETAILS	BY: M.S.		SITE No. 2924-00
	CHECKED: S.S.R./J.J.		

...\292400_Abut_Conc_Contract3_3d.dgn 2010-03-10 2:39:19 PM