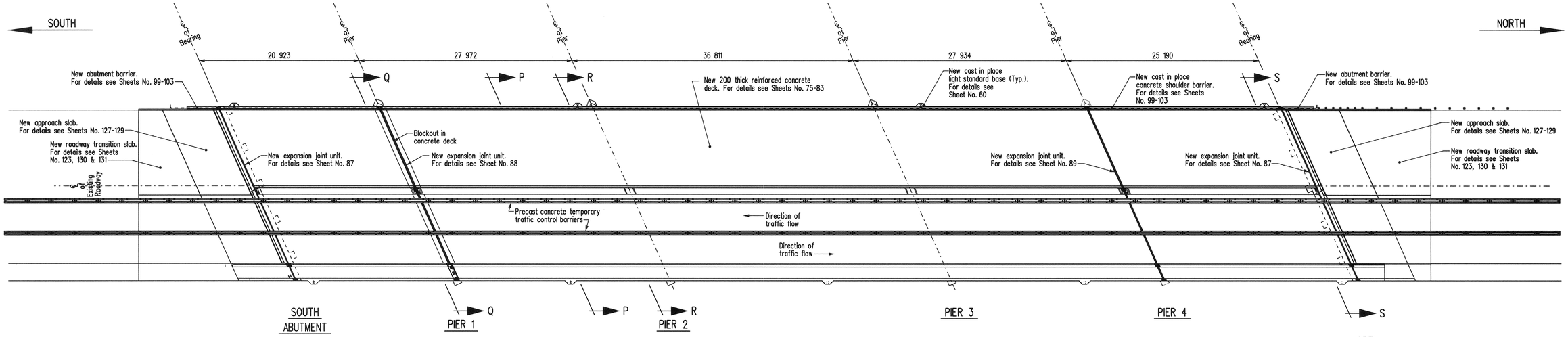

PLAN OF EXISTING BRIDGE

Showing Stage 2 construction.
Scale 1 : 250

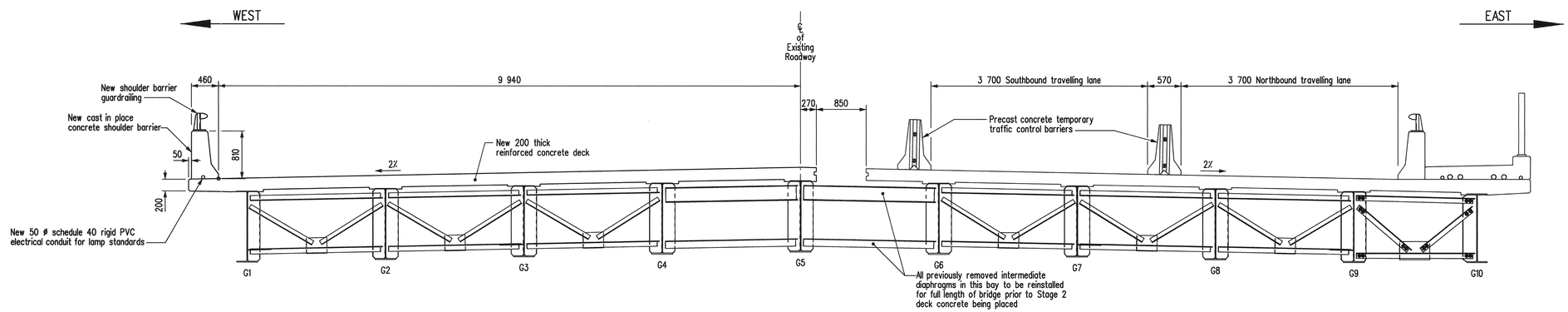

SECTION P-P

Showing Stage 2 construction.
Ttypical section at intermediate diaphragms.
Scale 1 : 40

NOTES:

1. For SECTIONS Q-Q and R-R see Sheet No. 18
2. For SECTION S-S see Sheet No. 19

REVISIONS		
DATE	BY	DESCRIPTION

PROVINCE OF MANITOBA
Mar. 15/10
S.S RIHAL
REGISTERED PROFESSIONAL ENGINEER

GENERAL LAYOUT
STAGE 2 MODIFICATIONS

RECONSTRUCTION AND STRENGTHENING OF EXISTING BRIDGE
OVER ASSINIBOINE RIVER - CONTRACT THREE
ON P.T.H. No. 100 IN R.L.'S 72, 73 & 94
PARISH OF ST. CHARLES

CITY OF WINNIPEG

Manitoba
Infrastructure and Transportation
Water Control & Structures

RELEASED FOR CONSTRUCTION BY:
Ruth Eden March 15/10
DIRECTOR — DATE
STRUCTURES, DESIGN AND CONSTRUCTION BRANCH

DESIGN	BY: M.B.C.	SCALE: As Shown
	CHECKED: S.S.R.	SHEET No. 17
DETAILS	BY: D.P.W.	
	CHECKED: S.S.R./J.J.	SITE No. 2924-00

..\292400contract3rehab.dgn 2010-03-09 10:07:43 AM