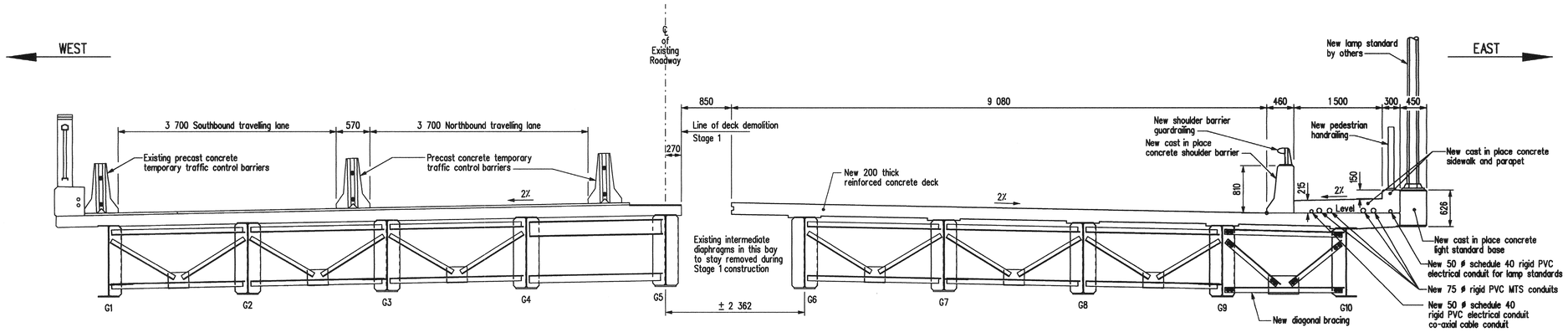

SECTION G-G

Showing Stage 1 construction.
Typical section at intermediate diaphragms.

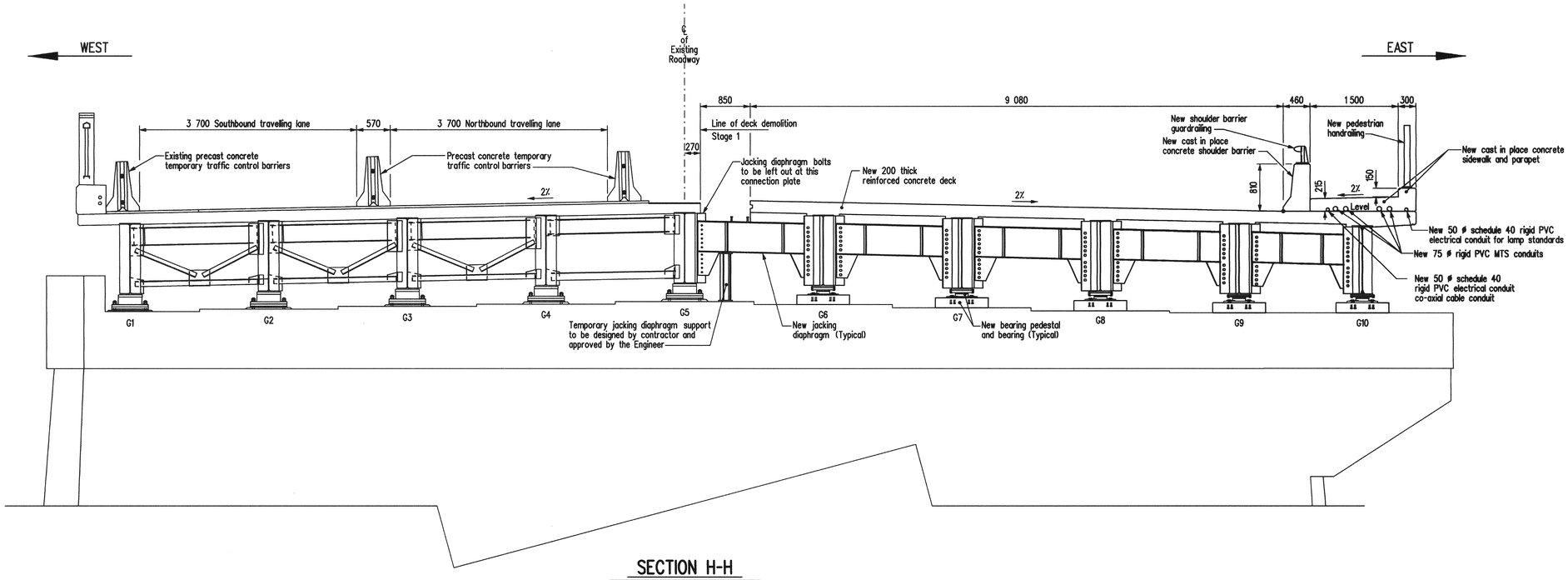

SECTION H-H

Showing new jacking diaphragms to be installed at Pier 1 during Stage 1 construction. Pier 4 similar.

NOTE:

For locations of SECTIONS G-G and H-H see Sheet No. 10.

REVISIONS		
DATE	BY	DESCRIPTION

PROVINCE OF MANITOBA
Mar. 15/10
S.S RIHAL
REGISTERED PROFESSIONAL ENGINEER

GENERAL LAYOUT
STAGE 1 MODIFICATIONS

RECONSTRUCTION AND STRENGTHENING OF EXISTING BRIDGE
OVER ASSINIBOINE RIVER - CONTRACT THREE
ON P.T.H. No. 100 IN R.L.'S 72, 73 & 94
PARISH OF ST. CHARLES

CITY OF WINNIPEG

Manitoba
Infrastructure and Transportation
Water Control & Structures

RELEASED FOR CONSTRUCTION
BY: Ruth Koden March 15/10
DIRECTOR — DATE
STRUCTURES DESIGN AND CONSTRUCTION BRANCH

DESIGN	BY: M.B.C.	
	CHECKED: S.S.R.	
DETAILS	BY: D.P.W.	
	CHECKED: S.S.R./J.J.	

SCALE: 1:40
SHEET No. 11
SITE No. 2924-00

...\292400contract3rehab.dgn 2010-03-09 10:07:29 AM