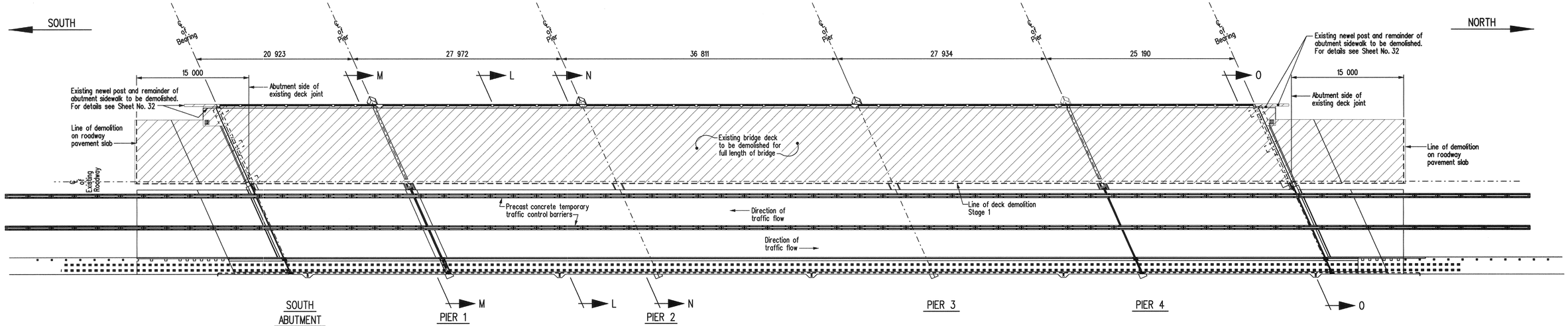

PLAN OF EXISTING BRIDGE

Showing traffic relocation for Stage 2 demolition.
Scale 1:250

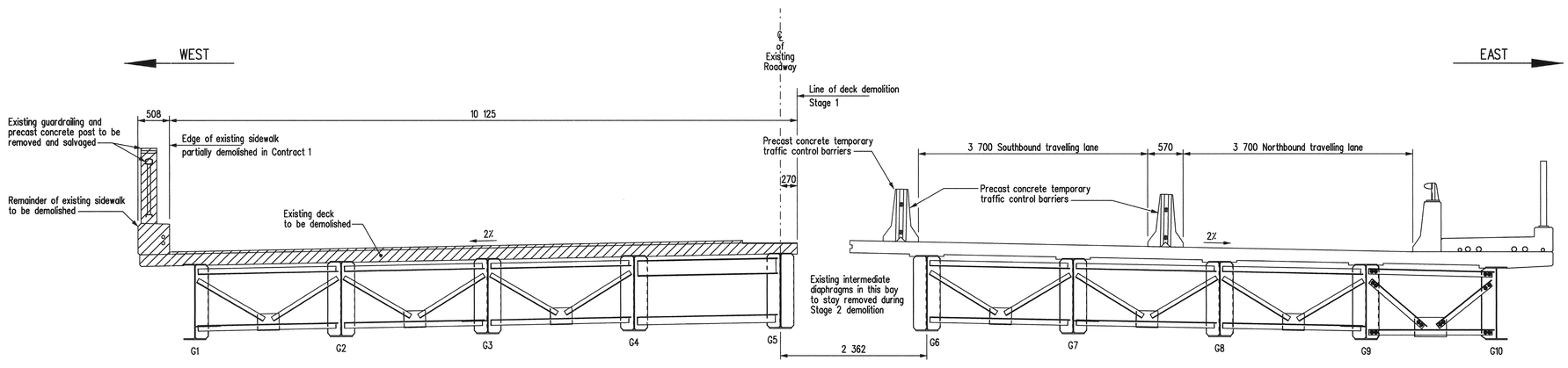

SECTION L-L

Showing Stage 2 demolition.
Ttypical section at intermediate diaphragms.
Scale 1:40

REVISIONS		
DATE	BY	DESCRIPTION

PROVINCE OF MANITOBA
MAR. 15/10
S.S RIHAL
REGISTERED PROFESSIONAL ENGINEER

GENERAL LAYOUT
STAGE 2 DEMOLITION

RECONSTRUCTION AND STRENGTHENING OF EXISTING BRIDGE
OVER ASSINIBOINE RIVER - CONTRACT THREE
ON P.T.H. No. 100 IN R.L.'S 72, 73 & 94
PARISH OF ST. CHARLES

CITY OF WINNIPEG

Manitoba
Infrastructure and Transportation
Water Control & Structures

RELEASED FOR CONSTRUCTION
BY: Ruth Eden March 15/10
DIRECTOR DATE
STRUCTURES DESIGN AND CONSTRUCTION BRANCH

DESIGN	BY: M.B.C.	
	CHECKED: S.S.R.	
DETAILS	BY: D.P.W.	
	CHECKED: S.S.R./J.J.	

SCALE: As Shown
SHEET No. 14
SITE No. 2924-00

...\292400contract3rehab.dgn 2010-03-09 10:07:38 AM