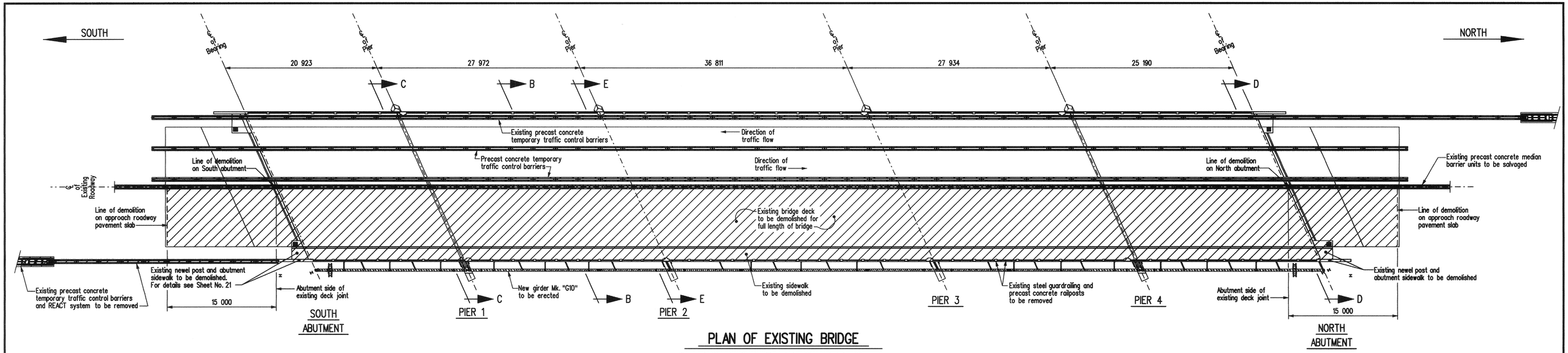

PLAN OF EXISTING BRIDGE

Showing traffic relocation for Stage 1 demolition and girder G10 erection
Scale 1:250

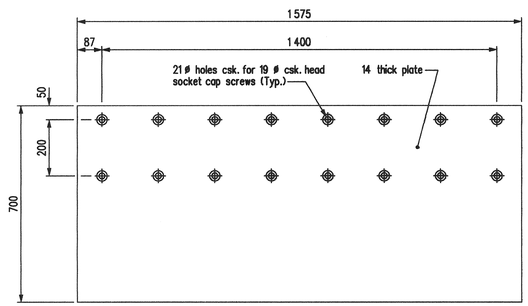

EXISTING COVER PLATE Mk. "PL1"

Scale 1:10

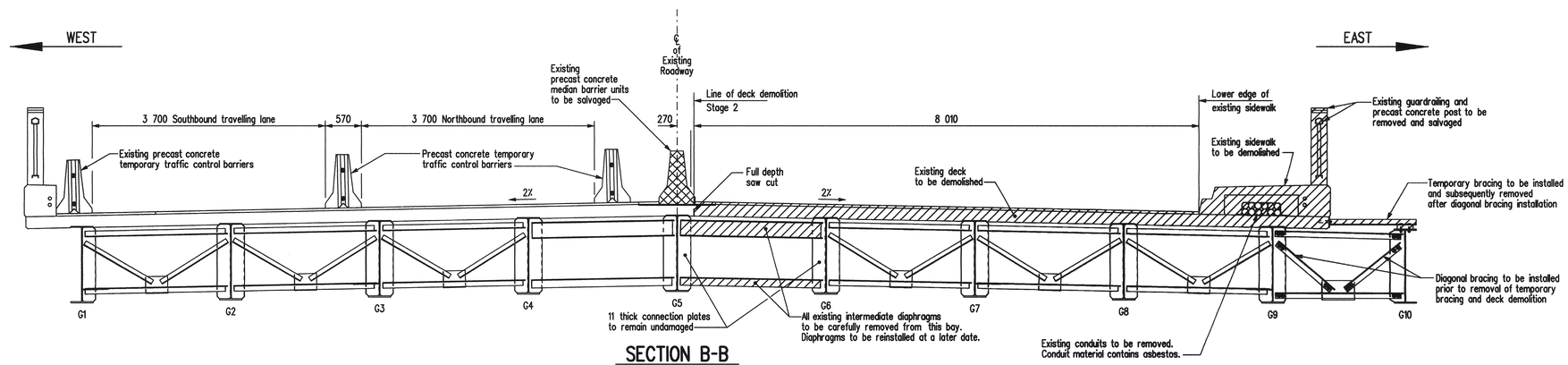

SECTION B-B

Showing Stage 1 demolition at intermediate diaphragms, girder G10 erection and locations of temporary traffic control barriers. Similar for all spans.
Scale 1:40

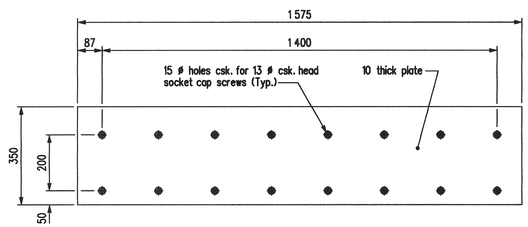

EXISTING COVER PLATE Mk. "PL2"

Scale 1:10

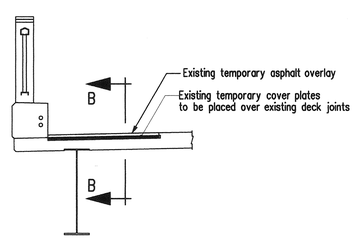

SECTION

Showing existing temporary cover plates.
Scale 1:40

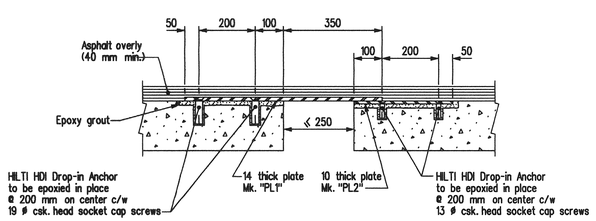

SECTION B-B

Showing temporary existing joint cover plate installation.
Scale 1:10

NOTES: Re; STAGE 1 DEMOLITION AND GIRDER G10 ERECTION

1. Temporary traffic control barriers to be installed as per details.
2. The Contractor shall erect debris catching platforms under the bridge. No demolished material or debris shall be allowed to fall into the river or onto underlying ground surfaces.
3. Existing precast concrete median barriers to be removed and salvaged.
4. Existing precast concrete railposts and steel guardrailing on East side of bridge to be removed and salvaged.
5. New girder Mk. "G10 temporary supports adjacent to abutments to be installed.
6. New girder Mk. "G10" to be installed.
7. New K-frame bracing, X-frame bracing and jacking beams between girders Mk. "G9" and "G10" to be installed.
8. New diagonal bracing to be installed between girders Mk. "G9" and "G10".
9. Temporary bracing to be removed from girder Mk. "G10" after diagonal bracing is installed between Girders Mk. "G9" and "G10".
10. Existing expansion joint and fixed joint assemblies on East side of bridge to be removed.
11. Line of demolition near ℄ of roadway to be a full depth saw cut.
12. Existing concrete sidewalk, concrete bridge guardrail lamp standard posts and deck on East side of bridge to be removed.
13. All existing diaphragms in bay indicated in details to be removed for entire length of bridge.
14. Existing newel posts, abutment sidewalk, abutment end blocks and catch basins on East side of bridge to be demolished within limits shown in details.

NOTES:

1. For SECTION C-C and D-D see Sheet No. 8.
2. For SECTION E-E see Sheet No. 9.

REVISIONS		
DATE	BY	DESCRIPTION

PROVINCE OF MANITOBA
Mar. 15/10
S.S RIHAL
REGISTERED PROFESSIONAL ENGINEER

GENERAL LAYOUT - STAGE 1
DEMOLITION AND GIRDER G10 ERECTION

RECONSTRUCTION AND STRENGTHENING OF EXISTING BRIDGE
OVER ASSINIBOINE RIVER - CONTRACT THREE
ON P.T.H. No. 100 IN R.L.'S 72, 73 & 94
PARISH OF ST. CHARLES

CITY OF WINNIPEG

Manitoba
Infrastructure and Transportation
Water Control & Structures

DESIGN	BY: M.B.C.	
	CHECKED: S.S.R.	
DETAILS	BY: D.P.W.	
	CHECKED: S.S.R./J.J.	

RELEASED FOR CONSTRUCTION BY:
Ruth Eden March 5/10
DIRECTOR — DATE
STRUCTURES DESIGN AND CONSTRUCTION BRANCH

SCALE: As Shown
SHEET No. 7
SITE No. 2924-00

...\292400contract3rehab.dgn 2010-03-09 10:07:23 AM