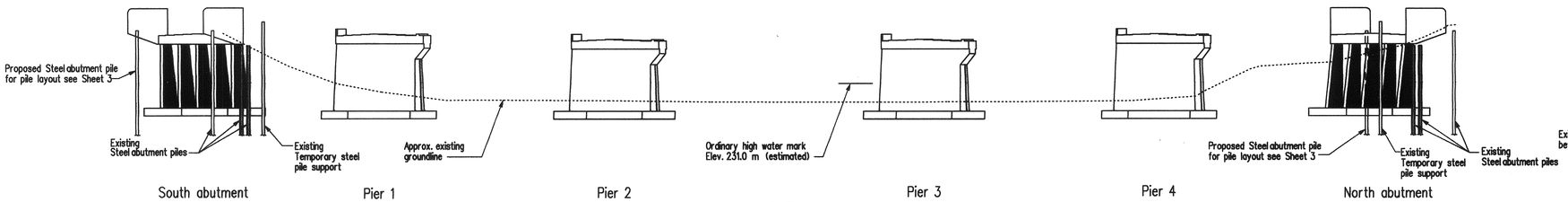

ELEVATION

Only showning the piers and abutments for clarity.

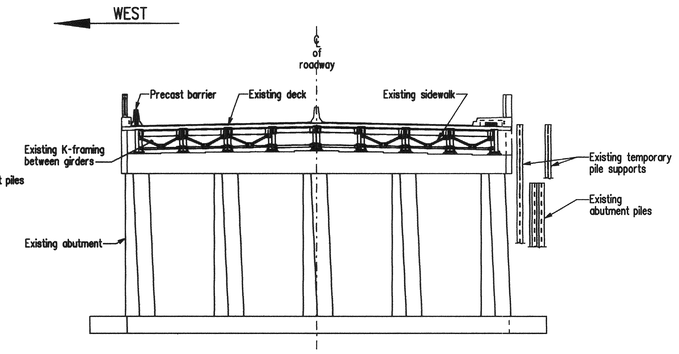

NORTH ABUTMENT ELEVATION - EXISTING

Shown normal to ℄ of roadway.
South abutment similar but opposite.
Scale 1:150

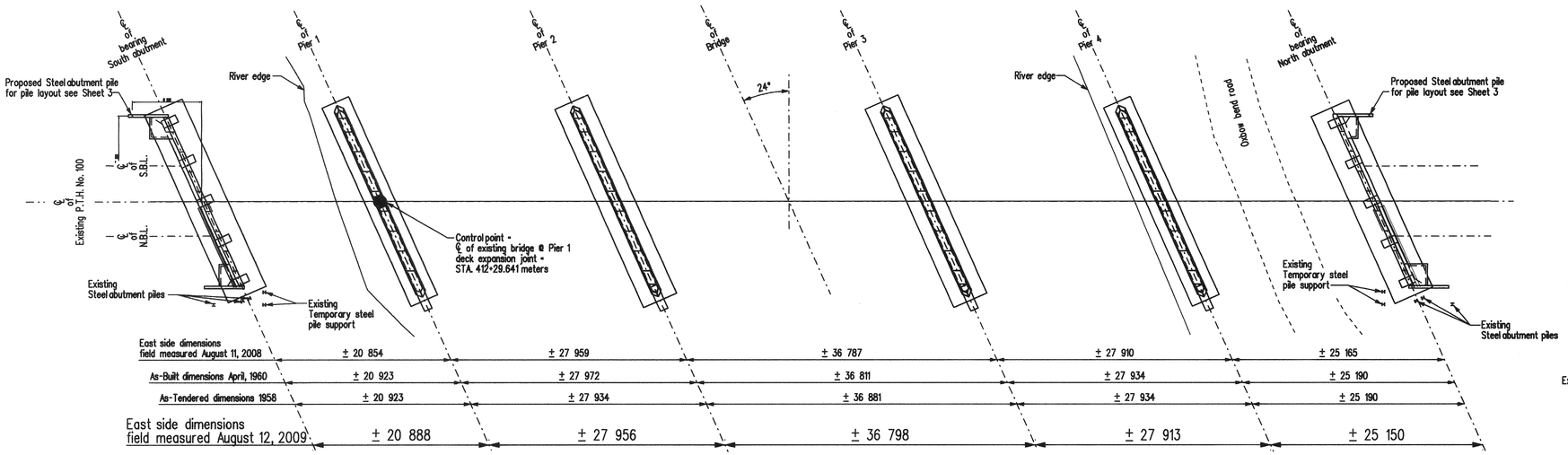

PLAN

Only showning the piers and abutments for clarity.

NOTE :

For location of Right Of Way, see Sheet No.4 SITE PLAN

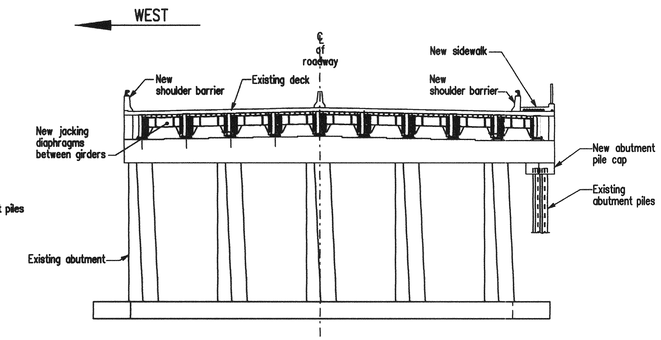

NORTH ABUTMENT ELEVATION - END OF CONTRACT 3

Shown normal to ℄ of roadway.
South abutment similar but opposite.
Scale 1:150

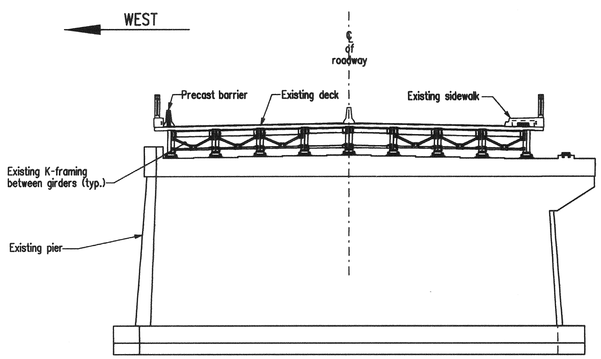

PIER ELEVATION - EXISTING

Shown normal to ℄ of roadway.
Scale 1:150

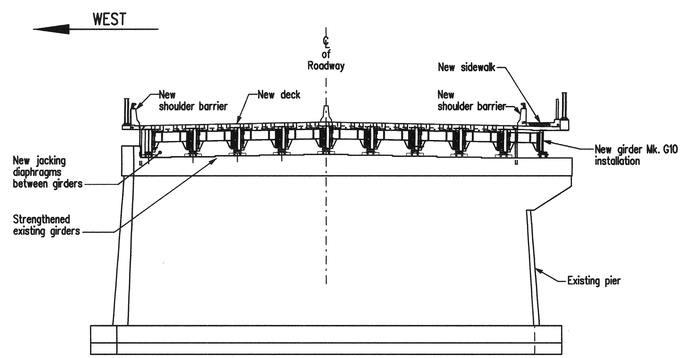

PIER ELEVATION - END OF CONTRACT 3

Shown normal to ℄ of roadway.
Scale 1:150

REVISIONS		
DATE	BY	DESCRIPTION

PROVINCE OF MANITOBA
Mar. 15/10
S.S RIHAL
REGISTERED PROFESSIONAL ENGINEER

GENERAL ELEVATION

RECONSTRUCTION AND STRENGTHENING OF EXISTING BRIDGE
OVER ASSINIBOINE RIVER - CONTRACT THREE
ON P.T.H. No. 100 IN R.L.'S 72, 73 & 94
PARISH OF ST. CHARLES

CITY OF WINNIPEG

Manitoba
Infrastructure and Transportation
Water Control & Structures

RELEASED FOR CONSTRUCTION BY:
Ruth Zeden March 15/10
DIRECTOR — DATE
STRUCTURE DESIGN AND CONSTRUCTION BRANCH

DESIGN	BY: M.B.C.	SCALE: 1:300	SHEET No. 2
	CHECKED: S.S.R.		
DETAILS	BY: M.S.	or as shown	SITE No. 2924-00
	CHECKED: S.S.R./J.J.		

...\292400_Cover Sheet-General Elevation-Borehole_Contract3.dgn 2010-03-09 9:24:33 AM