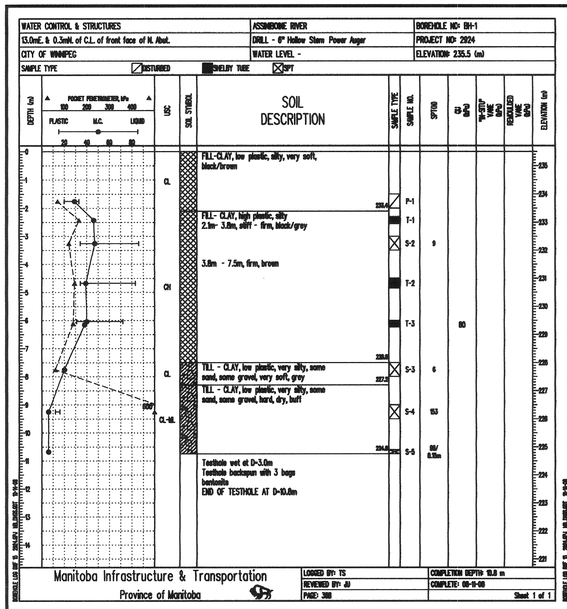

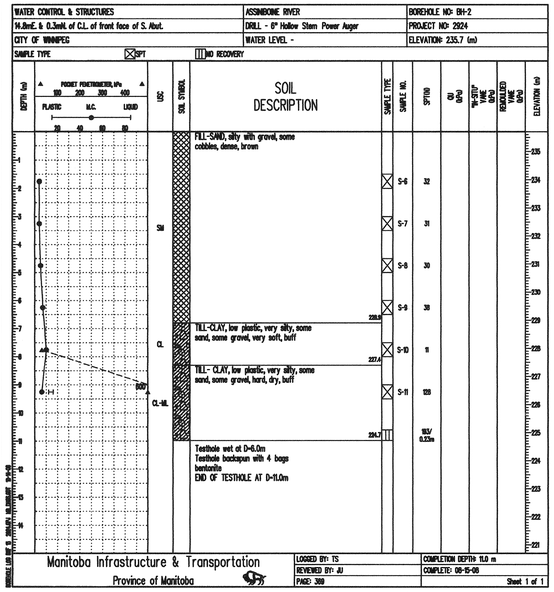

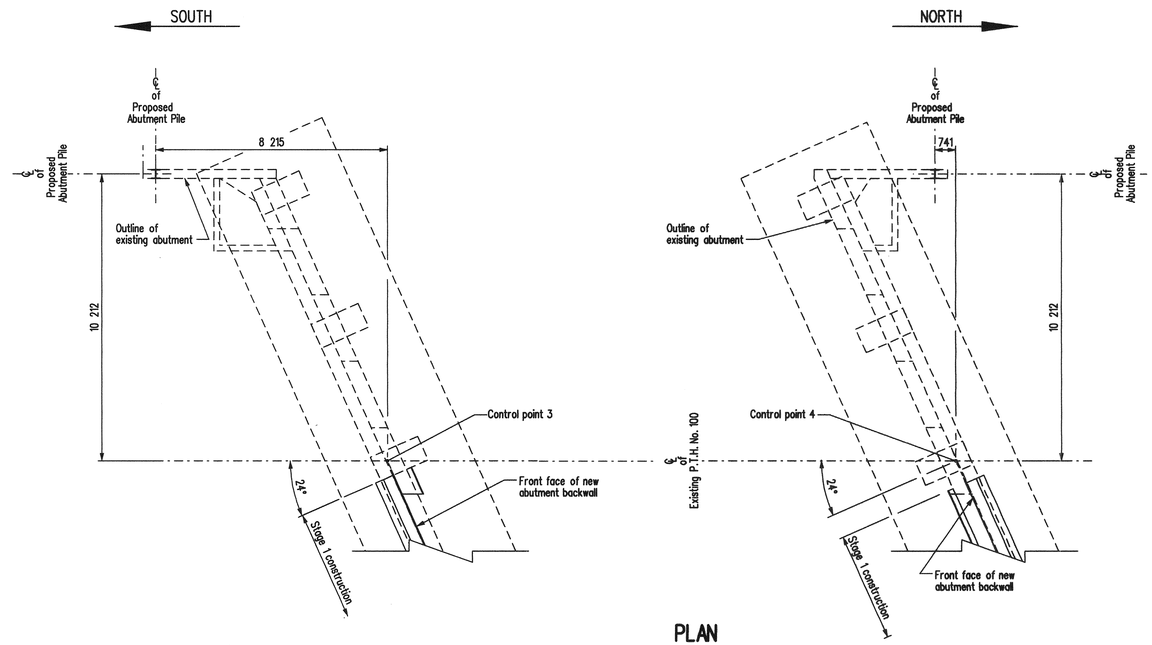

PLAN

Showning pile layout for SOUTHWEST AND NORTHWEST wingwalls
Scale 1:100

BILL OF PILES

SITE No. 2924-00

LOCATION	DESCRIPTION	No.	LENGTH	TOTAL
N. & S. ABUTMENT	Steel piles HP 310 x 110 (abutments)	2	15 m	30 m
			Total length of piles	30 m
N. & S. ABUTMENT	Steel pile tips for piles HP 310 x 110	2		

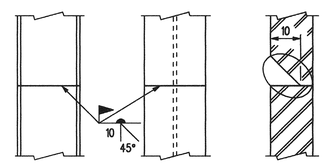

NOTE: RE: WELDING

1. 5 mm low hydrogen*E70 series electrodes shall be used.
2. The minimum root pass shall be 6 mm.

* E48018 equivalent metric electrode.

DETAIL OF STEEL PILE SPLICE

Not To Scale

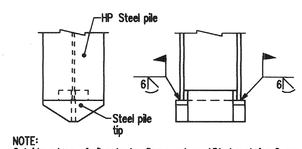

NOTE:
Outside edges of piles to be flame cut on 45° bevel for 6 mm

PILE TIP DETAIL

Not To Scale

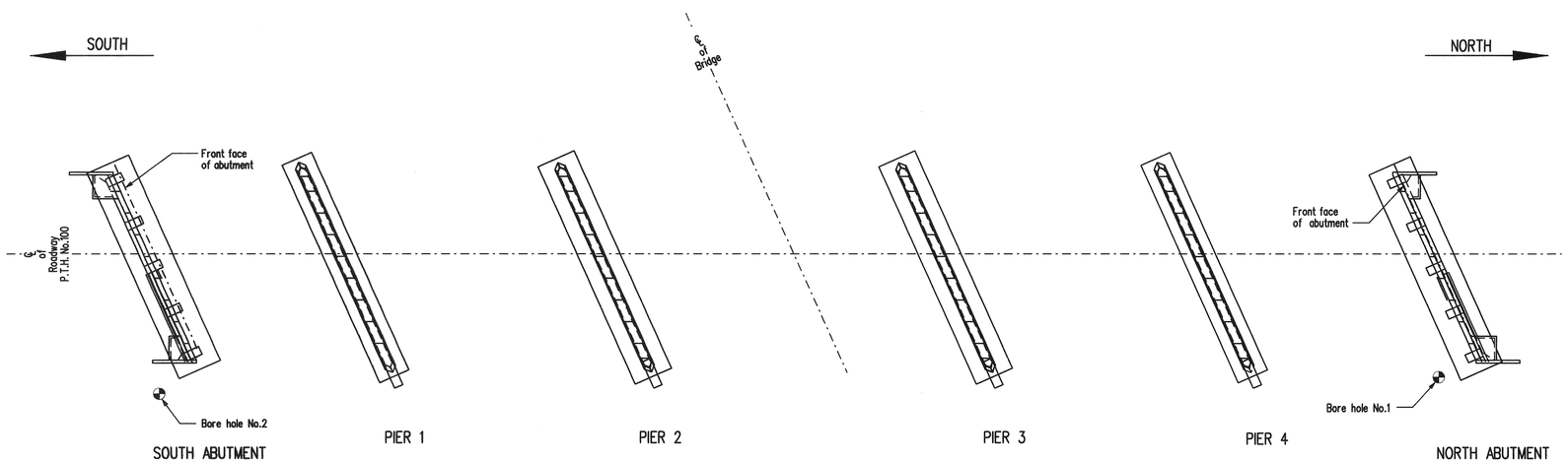

PLAN

Showing Bore Hole locations
Scale 1:300

NOTES - re Boring Logs

1. The Department provides log boring information shown on the Plans. This information may not be representative of the soil conditions throughout the site. Contractors may peruse all available soil information in the Water Control and Structures office located at 6th floor, 215 Garry Street, Winnipeg.
2. The following abbreviations apply to bore hole information:
   - Qu - Laboratory unconfined compressive strength in kPa
   - SPT (N) - Number of blows per 300 mm - Standard Penetration Test
   - USC - Unified Soil Classification
   - M.C. - Moisture Content
3. All Stations, elevations, offsets and depths as shown are in meters. All dimensions are in millimeters.
4. All bore hole locations shown in plan view are approximate.
5. Elevations on boring logs are at a vertical scale of 1:100.

REVISIONS		
DATE	BY	DESCRIPTION

PROVINCE OF MANITOBA
Mar. 15/10
S.S RIHAL
REGISTERED PROFESSIONAL ENGINEER

BORE HOLE LOGS

RECONSTRUCTION AND STRENGTHENING OF EXISTING BRIDGE
OVER ASSINIBOINE RIVER - CONTRACT THREE
ON P.T.H. No. 100 IN R.L.'S 72, 73 & 94
PARISH OF ST. CHARLES

CITY OF WINNIPEG

Manitoba
Infrastructure and Transportation
Water Control & Structures

RELEASED FOR CONSTRUCTION BY:
DIRECTOR — DATE
STRUCTURES DESIGN AND CONSTRUCTION BRANCH

DESIGN	BY: M.B.C.	
	CHECKED: S.S.R.	
DETAILS	BY: M.S.	
	CHECKED: S.S.R./J.J.	

SCALE: 1 : 100 or As shown
SHEET No. 3
SITE No. 2924-00

...\292400_Cover Sheet-General Elevation-Borehole_Contract3.dgn 2010-03-09 9:24:36 AM