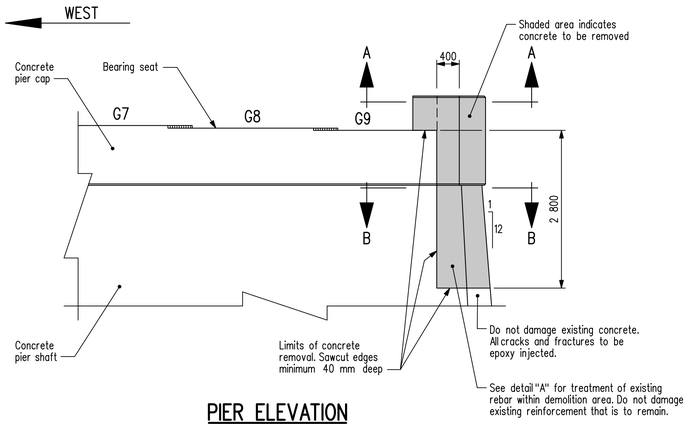

PIER ELEVATION

Only showing pier for clarity.
Typical for all piers.
Shown normal to face of pier.

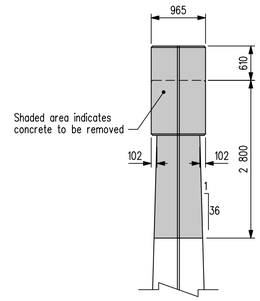

EAST END ELEVATION

Only showing pier for clarity.
Typical for all piers.

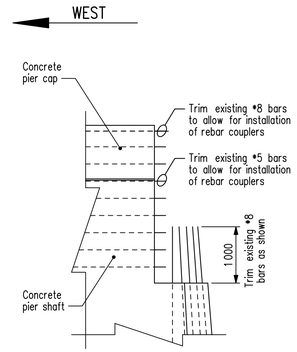

DETAIL "A"

Only showing pier for clarity.
Typical for all piers.

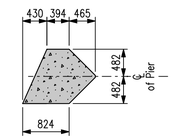

SECTION A-A

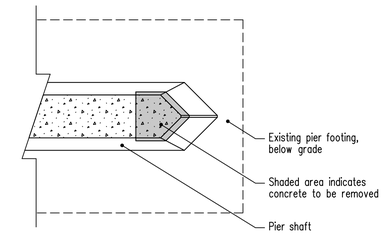

SECTION B-B

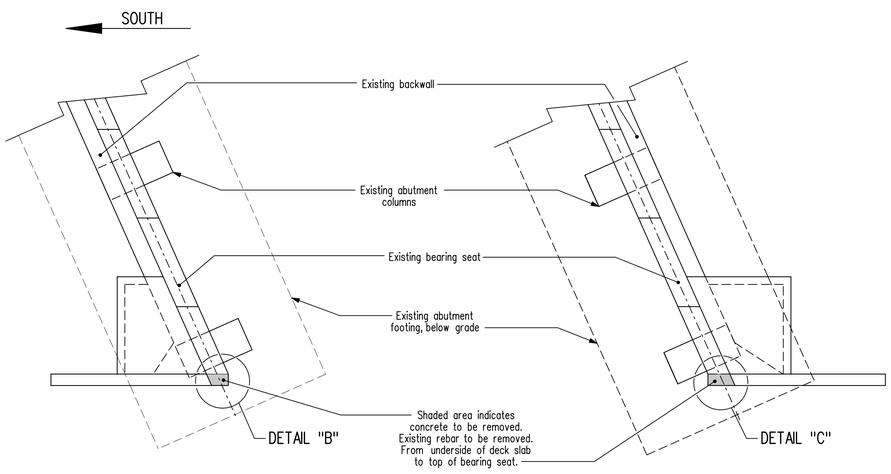

SOUTH ABUTMENT
Demolition on East side only

NORTH ABUTMENT
Demolition on East side only

ABUTMENT PLAN

Only showing abutment for clarity.
Scale 1:75

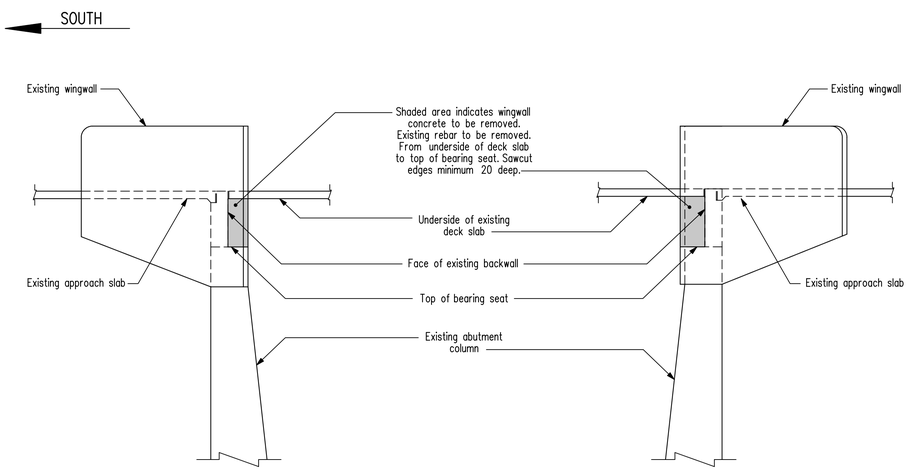

SOUTH ABUTMENT
Demolition on East side only

NORTH ABUTMENT
Demolition on East side only

ABUTMENT ELEVATION

Not showing girder for clarity.
Shown normal to ℄ of roadway.
Scale 1:75

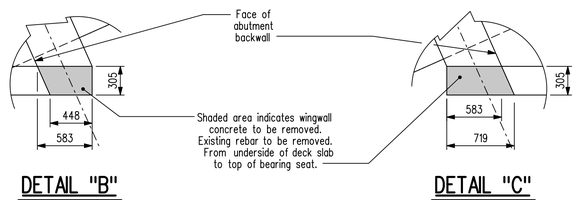

DETAIL "B"

Only showing abutment for clarity.

DETAIL "C"

Only showing abutment for clarity.

REVISIONS		
10/03/04	J.J.	As built
DATE	BY	DESCRIPTION

PROVINCE OF MANITOBA
Original signed by
M. B. CHISLETT
09/04/20
REGISTERED PROFESSIONAL ENGINEER

LIMITS OF DEMOLITION ON PIERS & ABUTMENT WINGWALLS

RECONSTRUCTION AND STRENGTHENING OF EXISTING BRIDGE
OVER ASSINIBOINE RIVER - CONTRACT ONE
ON P.T.H. No. 100 IN R.L.'S 72, 73 & 94
PARISH OF ST. CHARLES

CITY OF WINNIPEG

Manitoba
Infrastructure and Transportation
Water Control & Structures

RELEASED FOR CONSTRUCTION BY:
Original signed by
Ruth J. Eden
09/05/01
DIRECTOR — DATE
STRUCTURES, DESIGN AND CONSTRUCTION BRANCH

DESIGN	BY: M.B.C.	SCALE: 1:50	SHEET No. 5
	CHECKED: A.H.P.		
DETAILS	BY: M.S.	or as shown	SITE No. 2924-00
	CHECKED: M.B.C.		

...\292400_Rehab_Contract 1_Sub.dgn 2010-03-04 2:27:30 PM