WATER CONTROL & STRUCTURES	ASSINIBOINE RIVER	BOREHOLE NO: BH-2
14.8mE. & 0.3mN. of C.L. of front face of S. Abut.	DRILL - 6" Hollow Stem Power Auger	PROJECT NO: 2924
CITY OF WINNIPEG	WATER LEVEL -	ELEVATION: 235.7 (m)

SAMPLE TYPE ☒ SPT ▥ NO RECOVERY

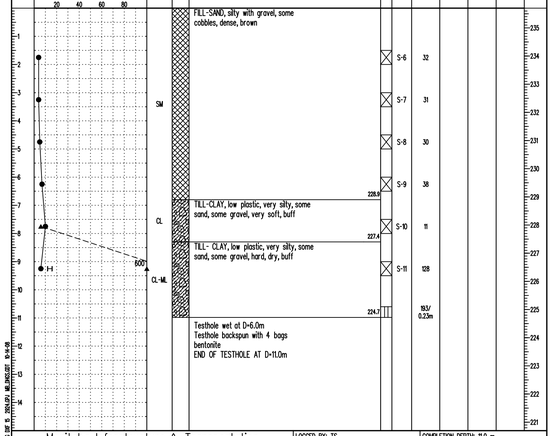

Manitoba Infrastructure & Transportation
Province of Manitoba

LOGGED BY: TS	COMPLETION DEPTH: 11.0 m
REVIEWED BY: JJ	COMPLETE: 08-15-08
PAGE: 369	Sheet 1 of 1

WATER CONTROL & STRUCTURES	ASSINIBOINE RIVER	BOREHOLE NO: BH-1
13.0mE. & 0.3mN. of C.L. of front face of N. Abut.	DRILL - 6" Hollow Stem Power Auger	PROJECT NO: 2924
CITY OF WINNIPEG	WATER LEVEL -	ELEVATION: 235.5 (m)

SAMPLE TYPE ▨ DISTURBED ■ SHELBY TUBE ☒ SPT

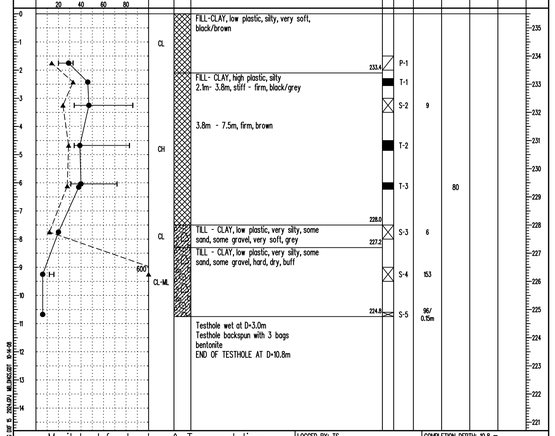

Manitoba Infrastructure & Transportation
Province of Manitoba

LOGGED BY: TS	COMPLETION DEPTH: 10.8 m
REVIEWED BY: JJ	COMPLETE: 08-11-08
PAGE: 368	Sheet 1 of 1

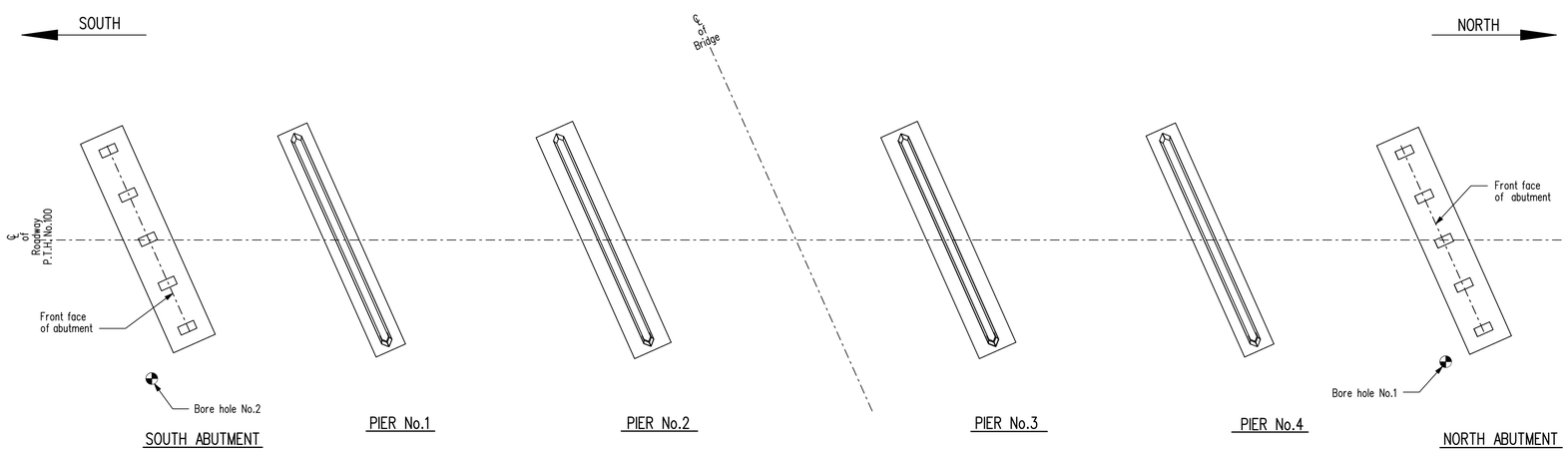

PLAN

Showing Bore Hole locations

Scale 1:300

NOTES - re Boring Logs

1. The Department provides log boring information shown on the Plans. This information may not be representative of the soil conditions throughout the site. Contractors may peruse all available soil information in the Water Control and Structures office located at 6th floor, 215 Garry Street, Winnipeg.
2. The following abbreviations apply to bore hole information:
   - Qu - Laboratory unconfined compressive strength in kPa
   - SPT (N) - Number of blows per 300 mm - Standard Penetration Test
   - USC - Unified Soil Classification
   - M.C. - Moisture Content
3. All Stations, elevations, offsets and depths as shown are in meters. All dimensions are in millimeters.
4. All bore hole locations shown in plan view are approximate.
5. Elevations on boring logs are at a vertical scale of 1:100.

REVISIONS		
10/04/03	J.J.	As built
DATE	BY	DESCRIPTION

PROVINCE OF MANITOBA
Original signed by
I. UMADAT
09/04/20
REGISTERED PROFESSIONAL ENGINEER

BORE HOLE LOGS

RECONSTRUCTION AND STRENGTHENING OF EXISTING BRIDGE
OVER ASSINIBOINE RIVER - CONTRACT ONE
ON P.T.H. No. 100 IN R.L.'S 72, 73 & 94
PARISH OF ST. CHARLES

CITY OF WINNIPEG

Manitoba
Infrastructure and Transportation
Water Control & Structures

RELEASED FOR CONSTRUCTION BY:
Original signed by
Ruth J. Eden
09/05/01
DIRECTOR — DATE
STRUCTURES, DESIGN AND CONSTRUCTION BRANCH

DESIGN	BY: T.S.	
	CHECKED: J.U.	
DETAILS	BY: N.J.	
	CHECKED: J.U.	

SCALE: 1 : 100 or As shown
SHEET No. 3
SITE No. 2924-00

...\292400_Sediment & Erosion Control.dgn 2010-03-04 2:35:31 PM