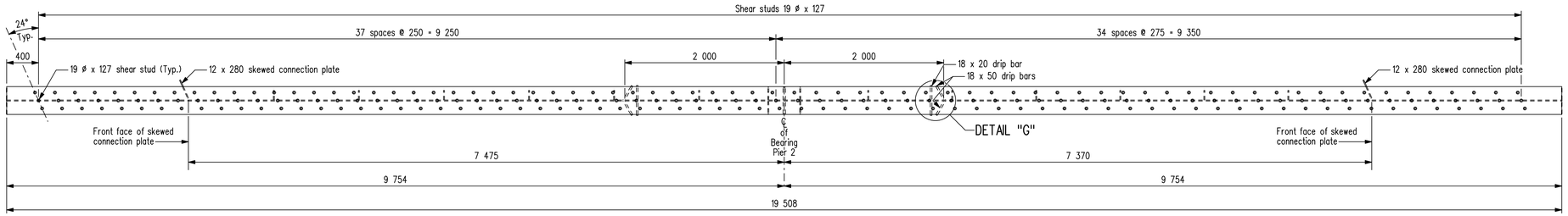

PLAN

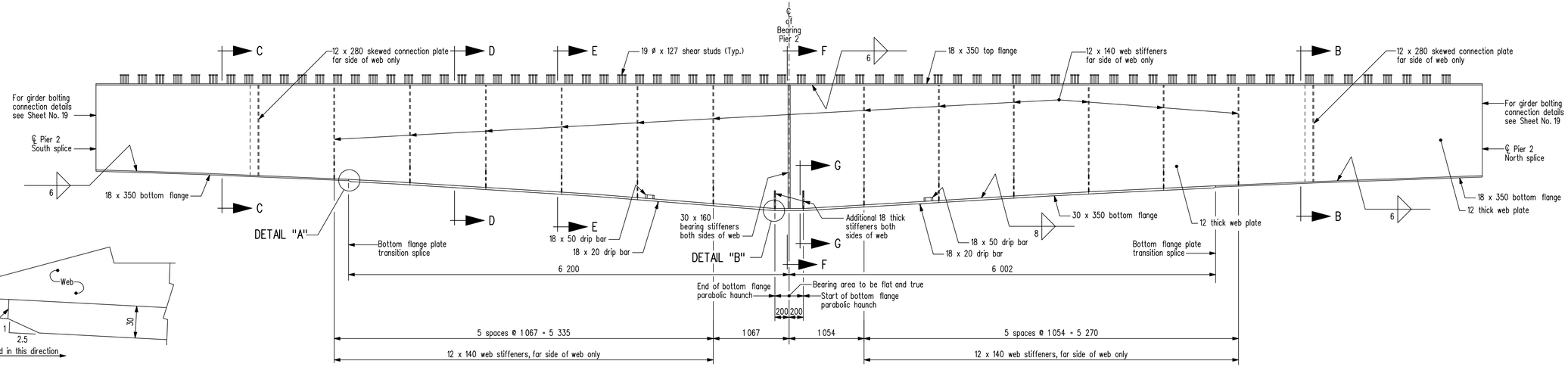

ELEVATION

PIER 2 SOUTH SPLICE TO PIER 2 NORTH SPLICE

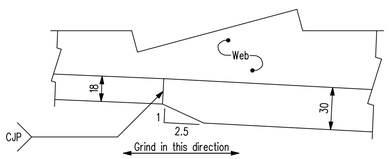

DETAIL "A"

Showing girder flange butt splice.
Scale 1:2

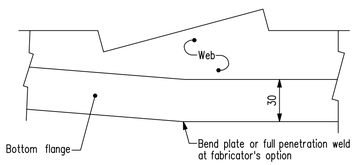

DETAIL "B"

Showing girder flange bend.
Scale 1:2

NOTES:

1. For SECTIONS B-B & C-C see Sheet No. 15.
2. For DETAIL "G" see Sheet No. 15.
3. See Sheet No. 20 for limits of tension flanges.

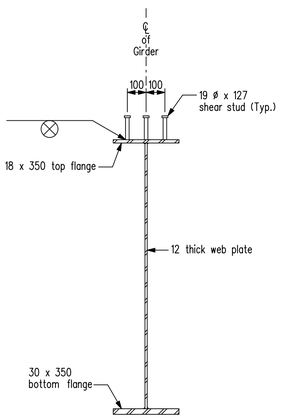

SECTION D-D

Showing shear stud locations.
Scale 1:15

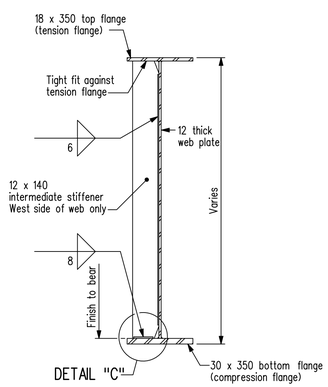

SECTION E-E

Showing intermediate stiffeners.
Shear studs not shown.
See Note 4.
Scale 1:15

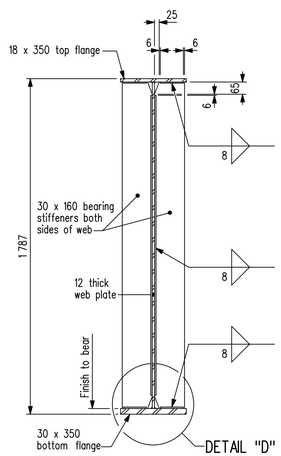

SECTION F-F

Showing bearing stiffeners.
Shear studs not shown.
Scale 1:15

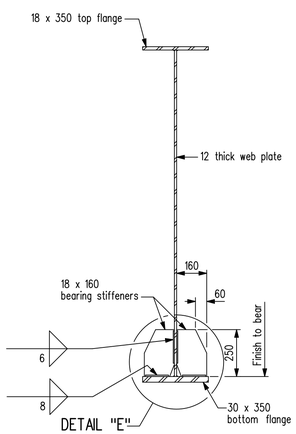

SECTION G-G

Showing additional bearing stiffeners.
Shear studs not shown.
Scale 1:15

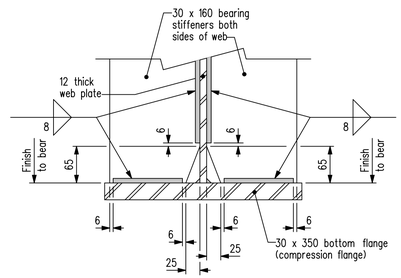

DETAIL "D"

Showing standard clip and weld terminations.
Scale 1:5

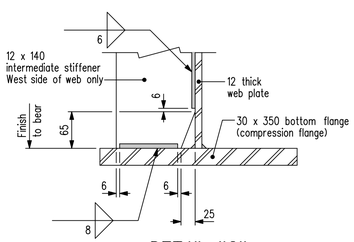

DETAIL "C"

Showing standard clip and weld terminations.
Scale 1:5

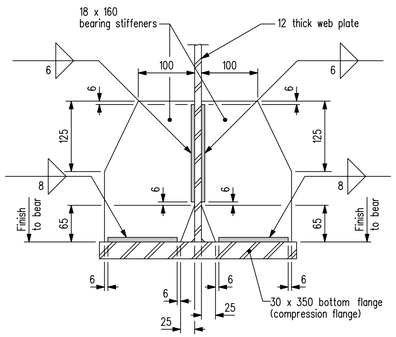

DETAIL "E"

Showing standard clip and weld terminations.
Scale 1:5

REVISIONS		
10/03/04	J.J.	As built
DATE	BY	DESCRIPTION

PROVINCE OF MANITOBA
Original signed by
M. B. CHISLETT
09/04/20
REGISTERED PROFESSIONAL ENGINEER

NEW GIRDER Mk. "G10"

RECONSTRUCTION AND STRENGTHENING OF EXISTING BRIDGE
OVER ASSINIBOINE RIVER - CONTRACT ONE
ON P.T.H. No. 100 IN R.L.'S 72, 73 & 94
PARISH OF ST. CHARLES

CITY OF WINNIPEG

Manitoba
Infrastructure and Transportation
Water Control & Structures

RELEASED FOR CONSTRUCTION
BY: Original signed by Ruth J. Eden 09/05/01
DIRECTOR — DATE
STRUCTURES, DESIGN AND CONSTRUCTION BRANCH

DESIGN	BY: M.B.C.	SCALE: 1:30 or As Shown
	CHECKED: M.W.H.	SHEET No. 16
DETAILS	BY: D.P.W.	
	CHECKED: M.B.C.	SITE No. 2924-00

...\Contract_1\292400rehab.dgn 2010-03-04 3:24:54 PM