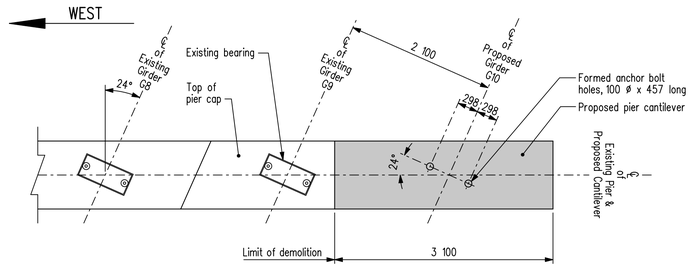

PIER 2 PLAN

Only showing the top of pier cap for clarity.

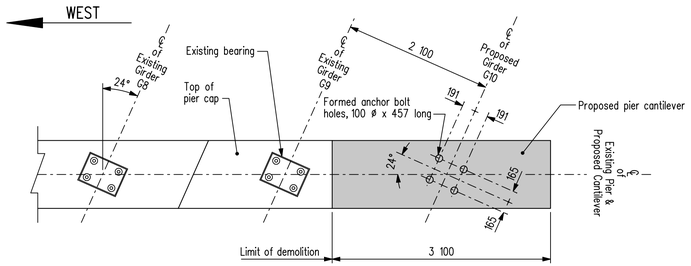

PIER 3 PLAN

Only showing the top of pier cap for clarity.

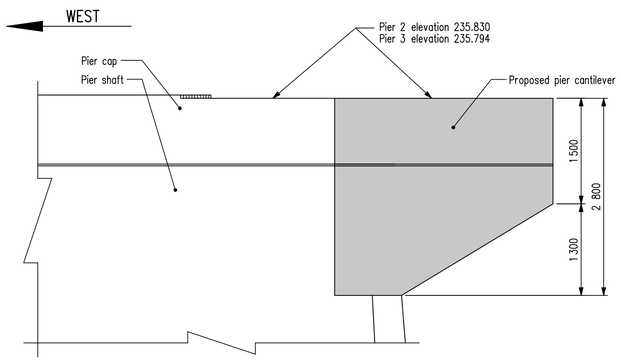

PIER 2 & 3 ELEVATION

Shown normal to face of pier.
Anchor bolts not shown, see plans above for locations.

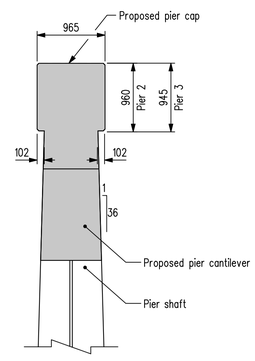

PIER 2 & 3 EAST END ELEVATION

Anchor bolts not shown, see plans above for locations.

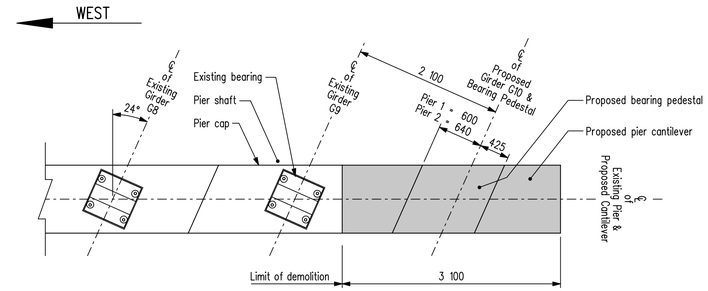

PIER 1 & 4 PLAN

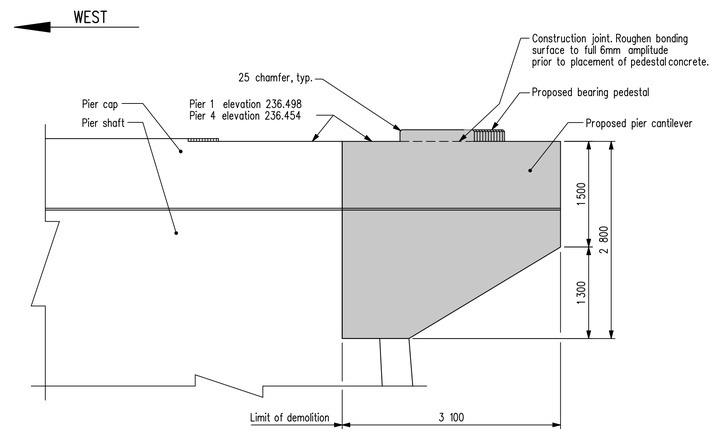

PIER 1 & 4 ELEVATION

Shown normal to face of pier.

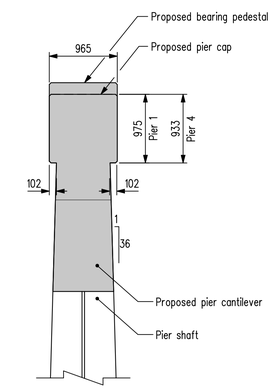

PIER 1 & 4 EAST END ELEVATION

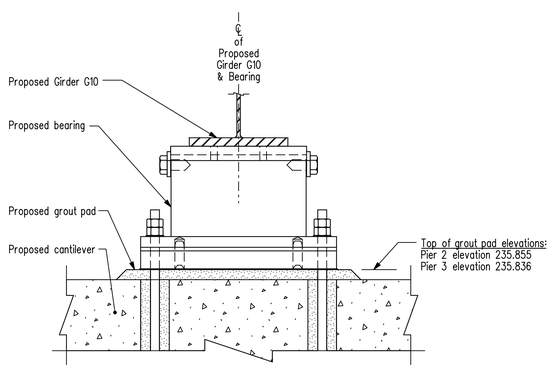

PIER 2 BEARING ELEVATIONS

Shown normal to ℄ of roadway.
Pier 3 bearing similar.
Scale 1 : 10

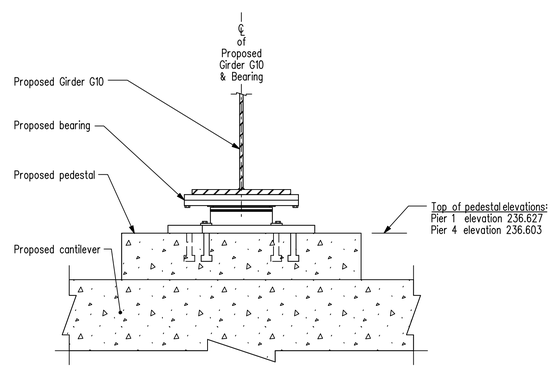

PIER 1 & 4 BEARING ELEVATIONS

Shown normal to ℄ of roadway.
Scale 1 : 10

NOTE :

See sheets 33, 34 & 35 for bearing details.

REVISIONS		
10/03/04	J.J.	As built
DATE	BY	DESCRIPTION

PROVINCE OF MANITOBA
Original signed by
M. B. CHISLETT
09/04/20
REGISTERED PROFESSIONAL ENGINEER

CANTILEVER & BEARING PEDESTAL CONCRETE DETAILS

RECONSTRUCTION AND STRENGTHENING OF EXISTING BRIDGE
OVER ASSINIBOINE RIVER - CONTRACT ONE
ON P.T.H. No. 100 IN R.L.'S 72, 73 & 94
PARISH OF ST. CHARLES

CITY OF WINNIPEG

Manitoba
Infrastructure and Transportation
Water Control & Structures

RELEASED FOR CONSTRUCTION BY:
Original signed by
Ruth J. Eden
09/05/01
DIRECTOR — DATE
STRUCTURES, DESIGN AND CONSTRUCTION BRANCH

DESIGN	BY: M.B.C.	SCALE: 1 : 40
	CHECKED: A.H.P.	SHEET No. 6
DETAILS	BY: M.S.	or as shown
	CHECKED: M.B.C.	SITE No. 2924-00

...\292400_Rehab_Contract 1_Sub.dgn 2010-03-05 9:43:41 AM