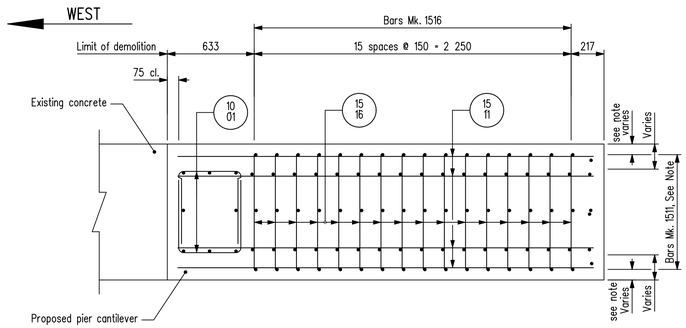

SECTION G-G

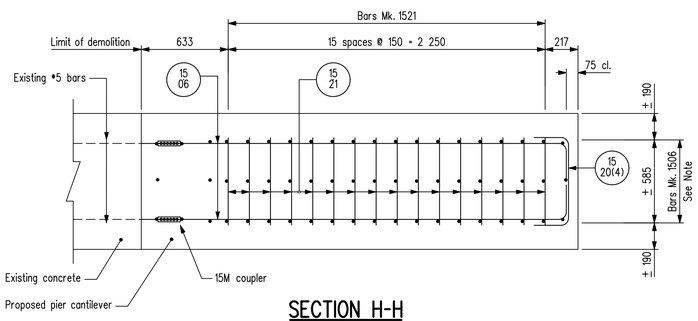

SECTION H-H

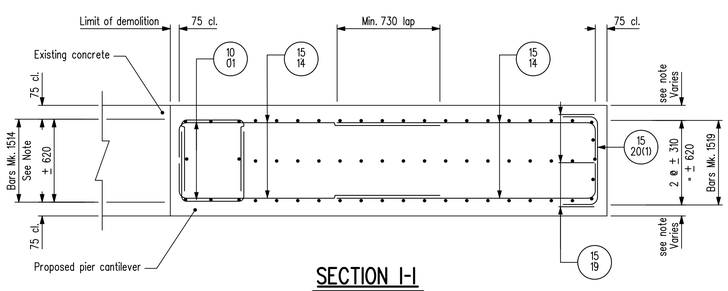

SECTION I-I

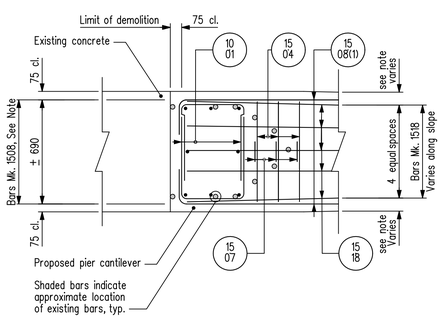

SECTION J-J

NOTES :

1. Location for Bars Mk. 2502, 1506 & 1509(1-4) will be determined by location of existing bars to be coupled to. Bars Mk. 1508, 1511 & 1514 will be located along the same vertical slope to tie into proposed Bars Mk. 2501
2. Reinforcing adjusted to suit existing reinforcing placement and concrete cover as noted:
   95 north face: 70 south face - Pier 1
   50 north face: 100 south face - Pier 2
   75 north face: 80 south face - Pier 3
   100 north face: 80 south face - Pier 4

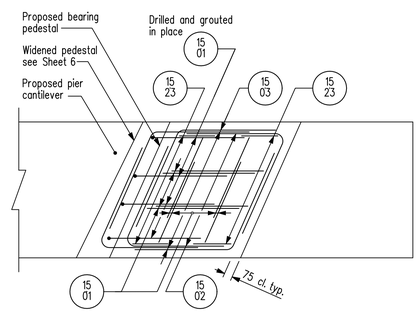

PEDESTAL PLAN

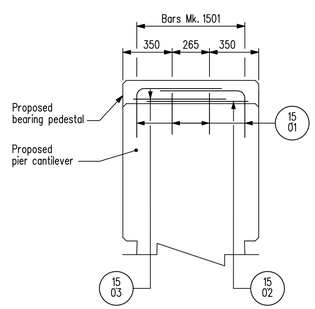

END ELEVATION

New bearing not shown.

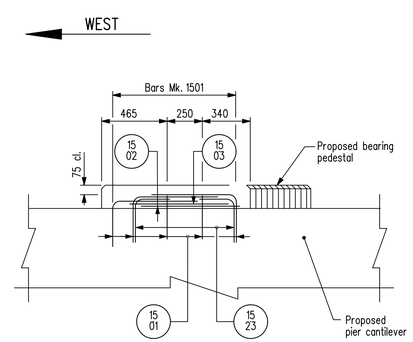

PEDESTAL ELEVATION

Shown normal to face of pier.
New bearing not shown.

BILL OF REINFORCING FOR NEW CANTILEVER — SITE No. 2924-00

MARK	TYPE	PIN DIAMETER	LENGTH	No.	MASS	BENDING DIAGRAM
1001	BENT	60	1 630	72	92.13	590, 450, 590
1501	BENT	90	940	32	47.23	330, 610
1502	BENT	90	1 450	8	18.21	280, 690, 660, 760
1503	BENT	90	1 450	8	18.21	640, 690, 280, 760

BILL OF REINFORCING FOR NEW CANTILEVER — SITE No. 2924-00

MARK	TYPE	PIN DIAMETER	LENGTH	No.	MASS
1504	BENT	65	6 850	12	129.05
1505-1	BENT	65	4 470	4	28.07
1505-2	BENT	65	4 650	4	29.20
1505-3	BENT	65	4 860	4	30.52
1505-4	BENT	65	5 040	4	31.65
1505-5	BENT	65	5 230	4	32.84
1505-6	BENT	65	5 410	4	33.97
1505-7	BENT	65	5 600	4	35.17

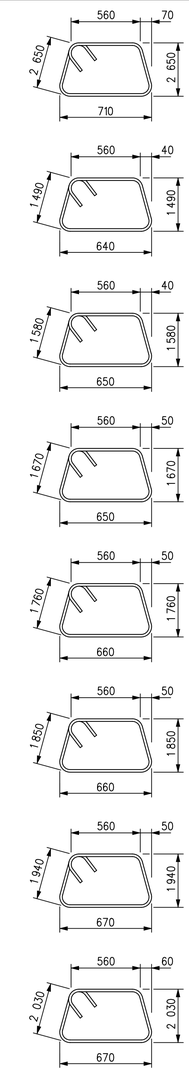

NOTE:

Refer to sheet 9 for typical reinforcing steel notes.

REVISIONS		
10/03/04	J.J.	As built
DATE	BY	DESCRIPTION

PROVINCE OF MANITOBA — Original signed by M. B. CHISLETT 09/04/20 — REGISTERED PROFESSIONAL ENGINEER

CANTILEVER & PEDESTAL REINFORCING DETAILS

RECONSTRUCTION AND STRENGTHENING OF EXISTING BRIDGE
OVER ASSINIBOINE RIVER - CONTRACT ONE
ON P.T.H. No. 100 IN R.L.'S 72, 73 & 94
PARISH OF ST. CHARLES

CITY OF WINNIPEG

Manitoba Infrastructure and Transportation
Water Control & Structures

RELEASED FOR CONSTRUCTION BY:
Original signed by Ruth J. Eden 09/05/01
DIRECTOR — DATE
STRUCTURES, DESIGN AND CONSTRUCTION BRANCH

DESIGN	BY: M.B.C.	SCALE: 1 : 20
	CHECKED: A.H.P.	SHEET No. 8
DETAILS	BY: M.S.	or as shown
	CHECKED: M.B.C.	SITE No. 2924-00