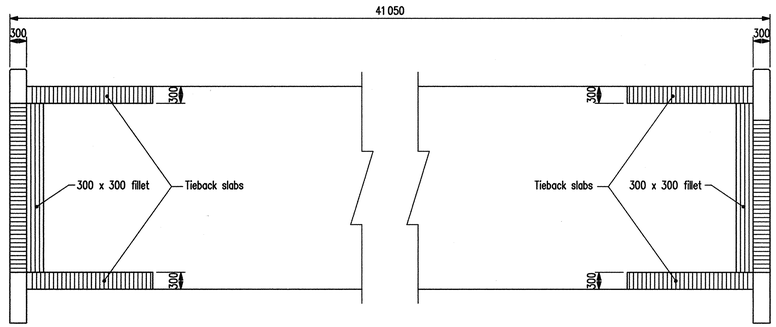

SIDE ELEVATION

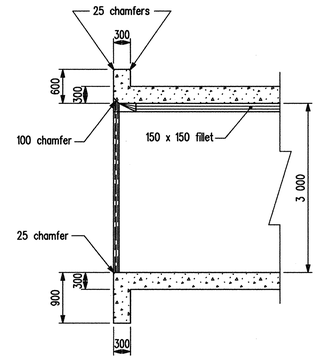

SECTION D-D

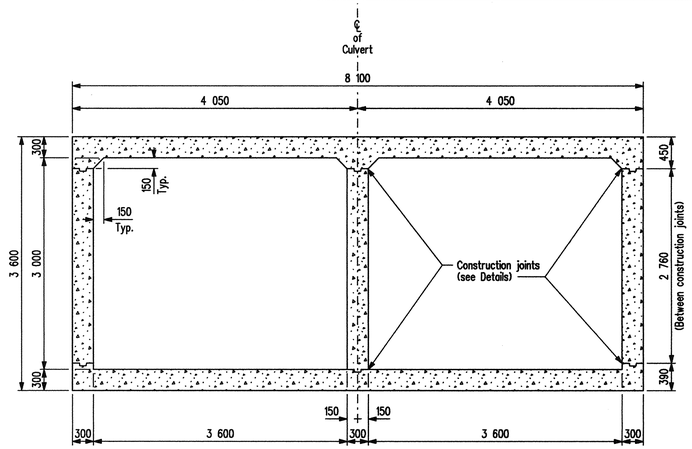

CROSS SECTION

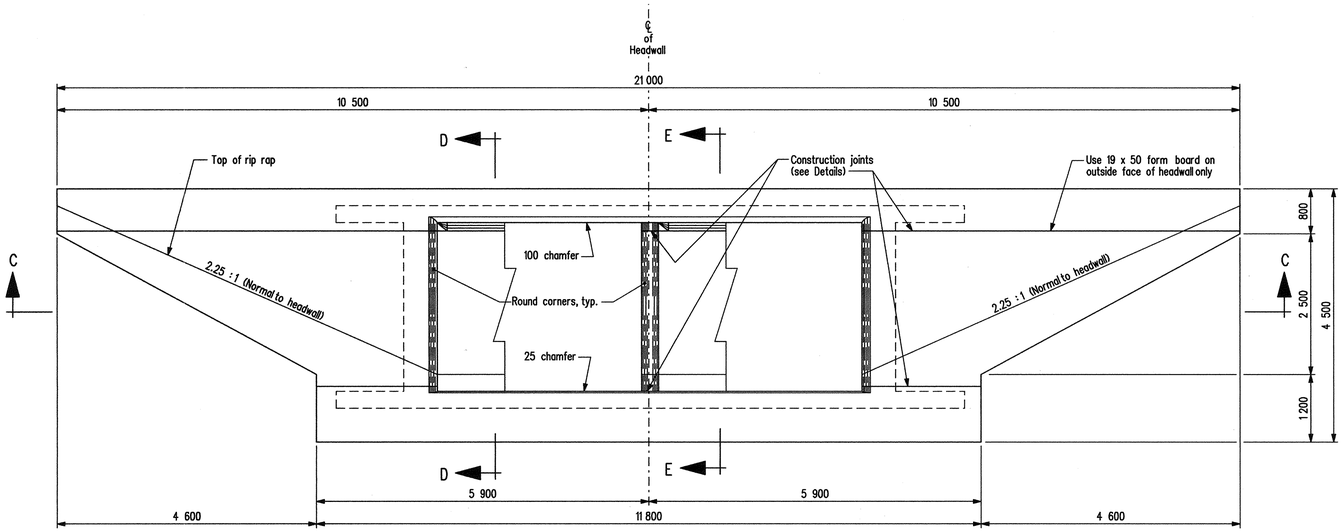

END ELEVATION

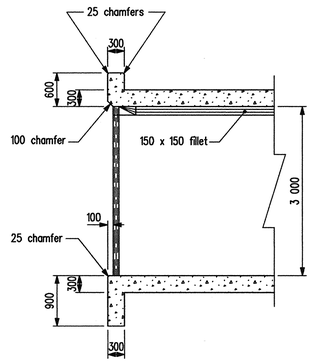

SECTION E-E

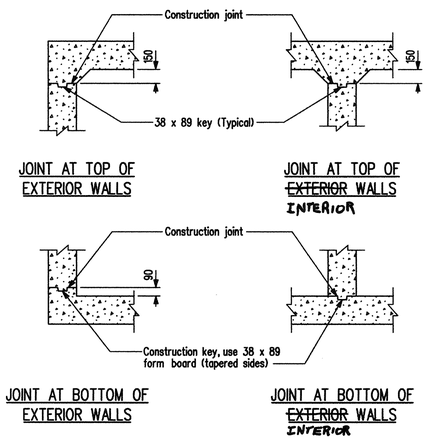

DETAILS OF CONSTRUCTION JOINTS

Scale 1 : 30

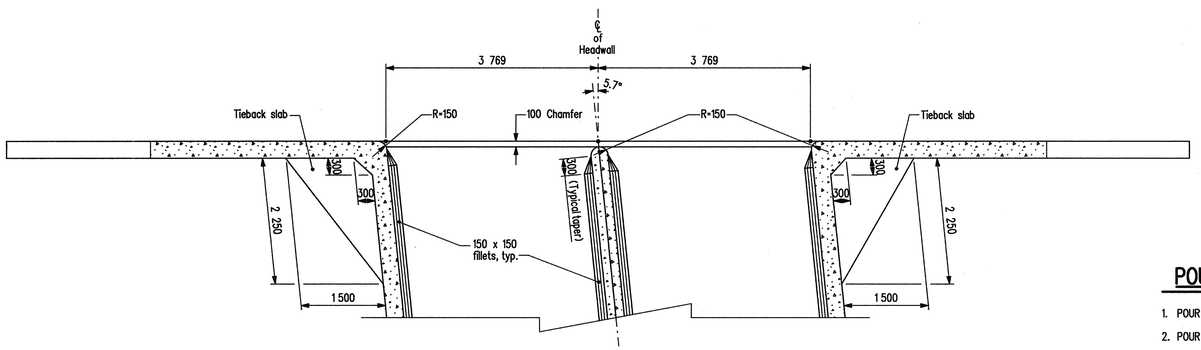

SECTION C-C

NOTES:

1. All exposed edges of barrel and headwalls to be chamfered 25 mm except where noted otherwise.
2. Construction joints as per details. Construction joints extending into headwall must be neat and level.
3. Areas to be Permeable Formwork Liner Finish:
   a.) All exposed surfaces of headwalls
   b.) All round faces of entrance and exit to culvert
4. All surfaces in contact with backfill material to be asphalt waterproofed.

POURING SCHEDULE

1.	POUR 1	Below lower construction joint	109.56 m³
2.	POUR 2	Between construction joints	116.51 m³
3.	POUR 3	Above the upper construction joint	116.83 m³
		Total	342.90 m³

REVISIONS		
DATE	BY	DESCRIPTION

PROVINCE OF MANITOBA
A. H. PANKRATZ
Nov 9/2009
REGISTERED PROFESSIONAL ENGINEER

CONCRETE DETAILS

FOR DOUBLE 3 600 x 3 000 R.C. BOX CULVERT
IN COULEE DES NAULT - 5.7° SKEW
ON P.T.H. No. 59 S.E. 1/4 SEC. 16-05-04E

R.M. of DE SALABERRY

Manitoba
Infrastructure and Transportation
Water Control & Structures

RELEASED FOR CONSTRUCTION BY:
DIRECTOR — DATE Nov. 09/09
STRUCTURES DESIGN AND CONSTRUCTION BRANCH

DESIGN	BY: A.H.P.	SCALE: 1:50 or As Shown
	CHECKED: M.H.	SHEET No. 5
DETAILS	BY: M.S.	SITE No. 2290-10
	CHECKED: A.H.P.	

...\229010\229010CulvertDetails.dgn 2009-11-07 9:56:51 AM