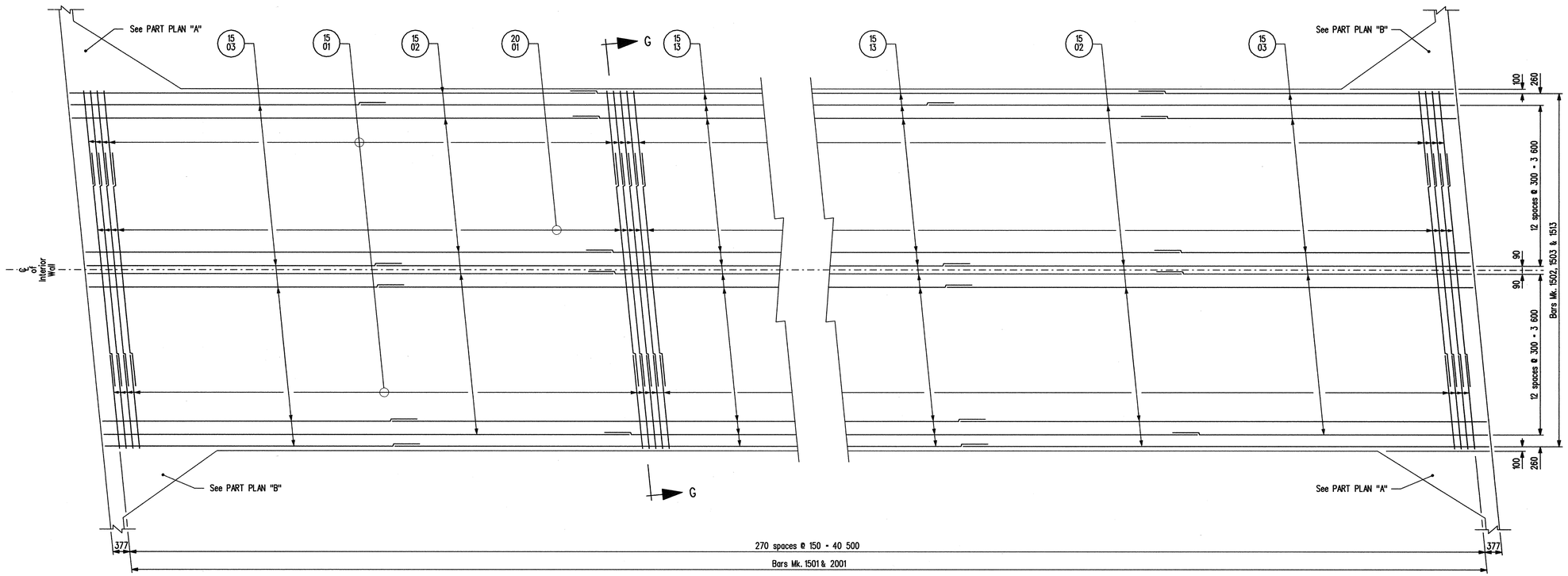

PLAN

Showing reinforcing details in TOP of TOP slab
and BOTTOM of BOTTOM slab.
Typical except as noted.

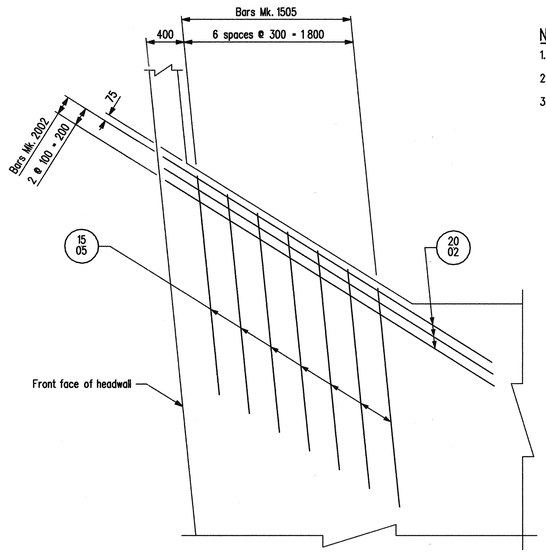

PART PLAN "A"

Showing reinforcing details in TOP and BOTTOM of tieback slab
Scale 1 : 30

NOTES:

1. For SECTION G-G see Sheet No. 7
2. 50 mm cl. all around unless noted otherwise.
3. Bars Mk. 15M to be lapped 550 mm.
   Bars Mk. 20M to be lapped 700 mm
   unless otherwise noted.

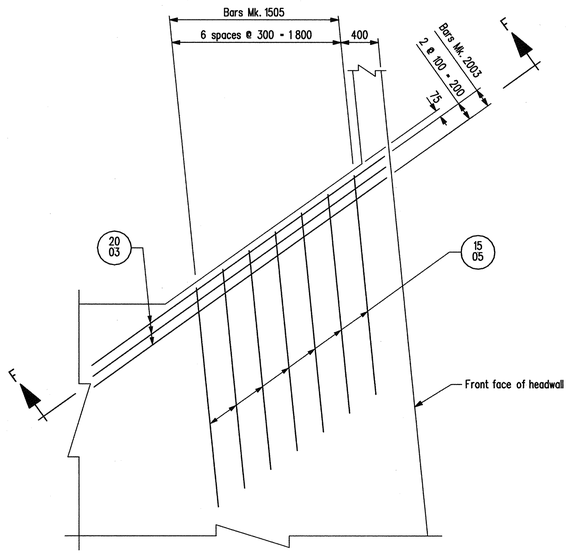

PART PLAN "B"

Showing reinforcing details in TOP and BOTTOM of tieback slab
Scale 1 : 30

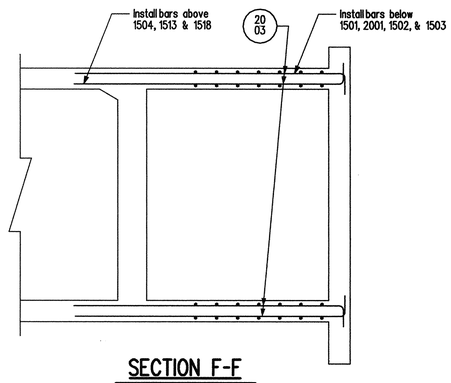

SECTION F-F

Showing reinforcing steel in N.E. and S.W. tieback slabs.
N.W. and S.E. tieback slabs similar.
Headwall and barrel wall reinforcing not shown.
Scale 1 : 40

REVISIONS		
DATE	BY	DESCRIPTION

PROVINCE OF MANITOBA
A. H. PANKRATZ
Nov 9/2009
REGISTERED PROFESSIONAL ENGINEER

SLAB REINFORCING DETAILS

FOR DOUBLE 3 600 x 3 000 R.C. BOX CULVERT
IN COULEE DES NAULT - 5.7° SKEW
ON P.T.H. No. 59 S.E. 1/4 SEC. 16-05-04E

R.M. of DE SALABERRY

Manitoba
Infrastructure and Transportation
Water Control & Structures

DESIGN	BY: A.H.P.	
	CHECKED: M.H.	
DETAILS	BY: M.S.	
	CHECKED: A.H.P.	

RELEASED FOR CONSTRUCTION
BY:
DIRECTOR, STRUCTURES DESIGN AND CONSTRUCTION BRANCH — DATE

SCALE: 1 : 50 or As Shown
SHEET No. 6
SITE No. 2290-10

...\2290\10\229010CulvertDetails.dgn 2009-11-05 7:48:32 AM